# THE IDEAL

## INSTALLATION & SERVICING MANUAL

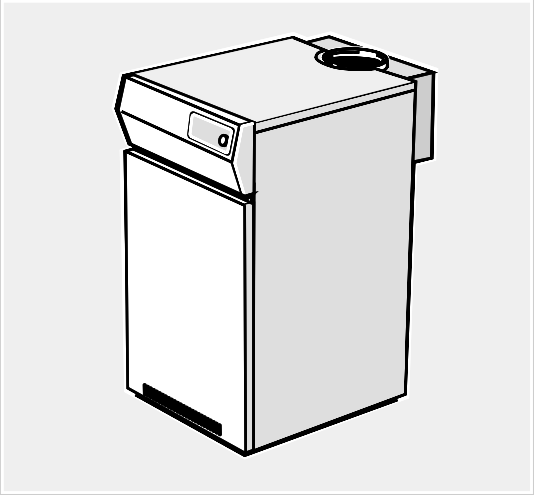

## *Concord*

### *CX 40 - 100*

Installers guide to commercial central heating boilers

spares & parts online
IBASIS.co.uk©

Ideal BOILERS

**CAUTION. To avoid the possibility of injury during the installation, servicing or cleaning of this appliance care should be taken when handling edges of sheet steel components.**

# CONTENTS

**Air Supply**. ..... 9

**Boiler Assembly - exploded view**. ..... 10

**Boiler Clearances**. ..... 6

**Burner Assemblies - exploded views.**
**CX 40-60**. ..... 24
**CX 70-100**. ..... 25

**Casing Assembly**. ..... 13

**Chimney System**. ..... 9

**Commissioning**. ..... 18

**Electrical Connections**. ..... 15

**Electrical Supply**. ..... 9

**Fault Finding**. ..... 30

**Gas Safety Regulations** ..... 3

**Gas Supply**. ..... 9

**Hydraulic Resistance**. ..... 6

**Initial Lighting**. ..... 18

**Installation**. ..... 10

**Mandatory Requirements**. ..... 8

**Option Kits**. ..... 5

**Pump**. ..... 7

**Servicing**. ..... 21

**Short List of Parts**. ..... 32

**Site Assembled Boilers**. ..... 28

**Static Head Requirements**. ..... 7

**System Connections**. ..... 12

**Ventilation**. ..... 9

**Water Circulation**. ..... 5

**Water Connections**. ..... 5

**Water Treatment**. ..... 7

**Wiring Diagrams**. ..... 16

# INTRODUCTION

## CONSTRUCTION

### *BOILER BODY*

The sectional boiler body is of cast iron and is supplied assembled on a sheet steel combustion chamber with an integral draught diverter. The boiler can be supplied in sectioned form to special order for site assembly - refer to the section headed 'Instructions for Site Assembled Boilers'.

### *CASING*

The casing is manufactured in stove enamelled sheet steel and is easily assembled on site.

### *BURNERS*

The 3 burners are of stainless steel construction.

### Gas Safety (Installation and Use) Regulations, 1994, amendments 1996 or rules in force.

It is the law that **all** gas appliances are installed and serviced by a CORGI registered installer (identified by ❀) in accordance with the above regulations. Failure to install appliances correctly could lead to prosecution. It is in your own interest, and that of safety, to ensure that the law is complied with.

The **Concord CX40/100** range of boilers has been tested and certified by British Gas to prEN656 for use with ***Natural gas only.***

### Multiple boiler installations

The **Concord CX range** is certificated for use in multiple boiler installations, providing that the following conditions are satisfied.

1. A downdraught thermostat kit MUST be fitted to ALL boilers in the installation.
2. A maximum of 6 boilers may be used with a single flue header.
3. For clearances see Frame 2.

A comprehensive guide to multiple installations of Concord CX boilers is available.

***WARNING.***

Failure to use a downdraught kit on every boiler in a multiple boiler installation will negate the certification of the installation and therefore contravene the essential requirements of the Gas Appliance Directive.

**Note.** ***Concord CX40, CX50 and CX60*** *boilers are intended for use as COMMERCIAL BOILERS and are NOT certified for use in domestic applications. A domestic installation is defined as an installation where the boiler takes its combustion air from a living space or from a room directly or indirectly connected with the living space. It is important, therefore, that no external control devices - e.g. flue dampers, economisers etc., are directly connected to this appliance unless covered by these Installation and Servicing Instructions or otherwise recommended by* **Caradon Plumbing Limited** *in writing. If in doubt, please enquire.*

*Any direct connection of a control device not approved by* **Caradon Plumbing Limited** *could invalidate the British Gas Certification, the normal appliance warranty and could also infringe the Gas Safety Regulations. Table 1, Table 2 and the descriptive notes which follow contain all the essential data likely to be required by the installer.*

## GAS CONTROLS

# GENERAL

**Table 1- Performance Data**

| Boiler | | | CX 40 | CX 50 | CX 60 | CX 70 | CX 80 | CX 90 | CX 100 |
|---|---|---|---|---|---|---|---|---|---|
| Number of sections | | | 3 | 4 | 4 | 5 | 5 | 6 | 6 |
| Boiler Input | Nett | kW | 47.3 | 56.3 | 67.7 | 79.2 | 90.7 | 102.3 | 112.6 |
| | | Btu/h (x 1000) | 161.4 | 192.1 | 230.9 | 270.3 | 309.6 | 349.0 | 384.2 |
| | Gross | kW | 52.5 | 62.5 | 75.1 | 87.93 | 100.7 | 113.5 | 125.0 |
| | | Btu/h (x 1000) | 179.1 | 213.3 | 256.2 | 300 | 343.6 | 387.3 | 426.5 |
| Boiler output to water | | kW | 42.0 | 50.0 | 60.08 | 70.34 | 80.56 | 90.8 | 100.0 |
| | | Btu/h (x 1000) | 143.3 | 170.6 | 205.0 | 240.0 | 274.9 | 309.8 | 341.2 |
| Gas rate | | $m^3/h$ | 5.0 | 5.96 | 7.16 | 8.38 | 9.6 | 10.82 | 11.91 |
| | | $(ft^3/h)$ | (176.6) | (210.5) | (252.9) | (295.9) | (339.0) | (382.1) | (420.6) |
| Approximate flue gas volume in the secondary flue of the chimney system | 4.5% $CO_2$ &100°C. | $dm^3/s$ | 44 | 52 | 63 | 73 | 84 | 94 | 104 |
| | 4.5% $CO_2$ & 212°F. | $ft.^3m$ | 93 | 110 | 133 | 155 | 178 | 199 | 220 |
| Manifold setting pressure | | mbar | 11.7 | 10.5 | 12.2 | 10.4 | 10.3 | 11.2 | 11.5 |
| | | (in.w.g.) | (4.7) | (4.2) | (4.9) | (4.2) | (4.1) | (4.5) | (4.6) |
| Seasonal efficiency (SEDBUK)* | | | [72.0]% | [72.4]% | [73.5]% | [72.6]% | [73.2]% | [73.4]% | [73.8]% |

*The value is used in the UK government's Standard Assessment Procedure (SAP) for energy rating of dwellings.
The test data from which it has been calculated have been certified by BGplc 0087.

**Note.** *To obtain gas consumption, divide gross heat input (kW) by a calorific value of 37.8 ($MJ/m^3$)*

**Table 2 - General Data**

| Boiler | | CX 40 | CX 50 | CX 60 | CX 70 | CX 80 | CX 90 | CX 100 |
|---|---|---|---|---|---|---|---|---|
| Number of sections | | 3 | 4 | 4 | 5 | 5 | 6 | 6 |
| Flow tappings | Rc (in. BSP) | 2 x 2 at rear | | | | | | |
| Return tappings | Rc (in. BSP) | 2 x 2 at rear | | | | | | |
| Maximum static head | metres (feet) | 45.7 (150) | | | | | | |
| Maximum pressure | bar (p.s.i.) | 4.5 (65) | | | | | | |
| Gas inlet connection | Rc (in. BSP) | 3/4 (3/4) | | | | | 1 (1 ) | |
| Minimum dynamic gas pressure required at the boiler inlet | mbar *gauge* | 15.0 | 15.0 | 16.2 | 15.0 | 15.0 | 15.0 | 15.4 |
| | (in.w.g.) | (6.0) | (6.0) | (6.5) | (6.0) | (6.0) | (6.0) | (6.2) |
| Electricity supply | | 230 Volts- single phase, 50 Hz, fuse 5 A | | | | | | |
| Nominal flue size (to BS. 835) | mm | 150 | 150 | 175 | 175 | 200 | 200 | 200 |
| | (in.) | (6) | (6) | (7) | (7) | (8) | (8) | (8) |
| Diverter outlet socket internal diameter | mm | 184 | 184 | 213 | 213 | 238 | 238 | 238 |
| | (in.) | (7.3) | (7.3) | (8.4) | (8.4) | (9.4) | (9.4) | (9.4) |
| Length of burner bars (overall) | mm | 377 | 497 | 497 | 617 | 617 | 737 | 737 |
| | (in) | (14.8) | (19.5) | (19.5) | (24.3) | (24.3) | (29.0) | (29.0) |
| Main burner injectors (3 off) | size, mm | 3.4 | 3.82 | 4.12 | 4.57 | 4.86 | 5.2 | 5.3 |
| Approximate dry weight | kg | 210 | 265 | 265 | 330 | 330 | 395 | 395 |
| | (lb.) | (463) | (584) | (584) | (727) | (727) | (871) | (871) |
| Water content | litre | 22 | 30 | 30 | 37 | 37 | 45 | 45 |
| | (gal.) | (4.8) | (6.6) | (6.6) | (8.2) | (8.2) | (9.9) | (9.9) |

Control is by a slow opening combination gas control incorporating a thermocouple flame failure device and mains voltage gas valve. The control box has a terminal plug connection for mains input.

## ELECTRICAL CONTROLS

The basic boiler is supplied with 2 printed circuit boards; designated board No. 1C and board No. 6A.

Board No. 1C contains an adjustable electronic boiler thermostat and board No. 6A contains a fixed setting pump overrun timer. A preset overheat thermostat is also provided.

## OPTION KITS

**Controls option**

Three L.E.D.s are fitted to the boiler upper front panel fixing indicating:

- Boiler on
- Overheat thermostat operation
- Pilot failure (Lockout)

The facility for wiring remote indication of the above 3 conditions is also provided.

An L.C.D. screen gives digital information of water flow and of water flow temperature.

Four additional 'plug-in' printed circuit boards; 'No. 2, 'No. 3', 'No. 5', and 'No. 21' are contained in this kit for fitting in the upper control panel.

**Pressure gauge kit**

In addition to the above control kit, an optional pressure gauge is also available for the range of boilers. Details for fitting are included with the pressure gauge.

**Downdraught thermostat kit**

This kit is optional when used on a single CX installation, but mandatory when used on a multiple boiler installation.

## DUTY

The range of boilers is suitable for: Combined indirect pumped domestic hot water ***and*** central heating systems; Independent indirect pumped domestic hot water ***or*** central heating systems.

Fully pumped systems may be open vented or sealed.

The range of boilers is NOT suitable for:

1. Gravity DHW systems.
2. Gravity heating systems.
3. Direct domestic hot water supply.

## WATER CIRCULATION SYSTEM

Due to the compact nature of the boiler the heat stored within the castings at the point of shutdown of the burner must be dissipated into the water circuit in order to avoid the overheat thermostat tripping. In order to allow pump operation after burner shutdown the boiler control box incorporates a pump overrun facility which operates for approximately 6 minutes after burner shutdown and, in order to make use of this, the pump must be wired to the appropriate terminal $L_2$ (pump) in the boiler control box.

1. The minimum flow rate as given in Table 4 must be maintained whenever the boiler is firing and during the pump overrun period.

2. During the period of pump overrun there must be an open circuit of adequate water volume and/or load. The minimum size of this circuit is given by the use of Graph 1.

   **Examples shown on Graph 1**

   **a.** For the **CX100 and CX 90** the minimum circuit during pump overrun could be a load of 6 kW with a volume of 31 litres or any other combination given by the relevant line.

   **b.** For the **CX 80 and CX 70** the minimum circuit during pump overrun could be a load of 2 kW with a volume of 45 litres or any other combination given by the relevant line.

   The above circuit capacity during pump overrun may be

## 1 WATER CONNECTIONS

Flow and return connections are 2" BSP.

A 1" BSP tapping is provided in the redundant return flange for the cold feed or expansion vessel connection.

**Safety Valve**

A safety valve must be sized and fitted in accordance with BS. 6644 for every type of system. The valve should be set at 0.7 bar (10 lb/in.$^2$) above the operating pressure in the boiler. The maximum safety valve setting is 0.7 bar (10 lb/in.$^2$) above the maximum design operating pressure of 4.5 bar (65 lb/in.$^2$).

**Cold Feed/Open Vent**

The independent cold feed and the open vent must comply with BS. 6644 and be of the following minimum size.

| Boiler Size | Cold Feed | Open Vent |
|---|---|---|
| **CX 40 - 50** | 3/4" | 1" |
| **CX 60 -100** | 1" | 1 1/4" |

Sealed system filling point - refer to Frame 8

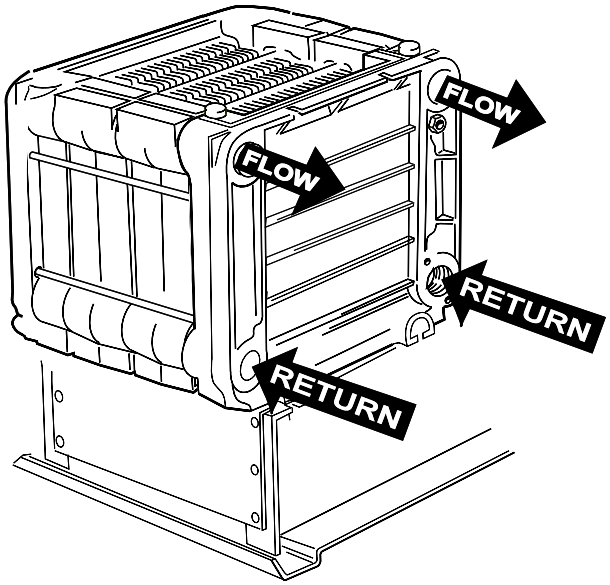

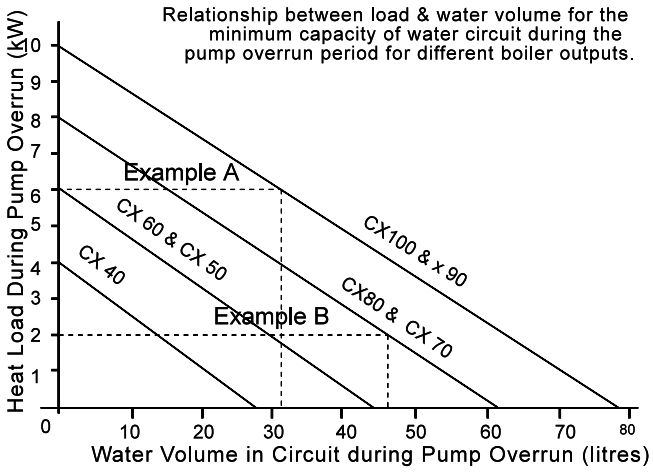


**Graph 1 - Heat load / water volume**

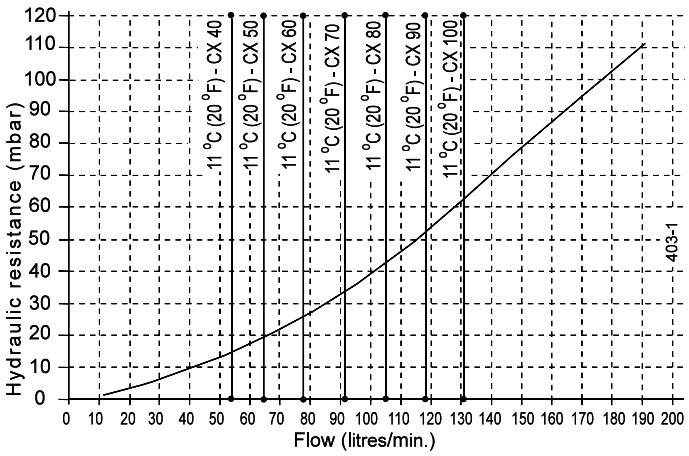


**Graph 2 - Hydraulic Resistance**

## 2 CLEARANCES & DIMENSIONS

**Table 3**

| Boiler Size | | CX 40 | CX 50 | CX 60 | CX 70 | CX 80 | CX 90 | CX100 |
|---|---|---|---|---|---|---|---|---|
| No. of sections | | 3 | 4 | 4 | 5 | 5 | 6 | 6 |
| Front clearance | mm (in) | 750 (29 1/2) | | | | | | |
| Rear clearance | mm (in) | 0 | 0 | 0 | 150 (6) | 150 (6) | 300 (12) | 300 (12) |
| Side clearance | mm (in) | 50 (2) | 50 (2) | 50 (2) | 50 (2) | 50 (2) | 100 (4) | 100 (4) |
| Dimension **A** | mm (in) | 754 (29 3/4) | 887 (35) | 887 (35) | 1047 (41 1/4) | 1047 (41 1/4) | 1217 (48) | 1217 (48) |
| Dimension **B** | mm (in) | 108 (4 1/4) | 108 (4 1/4) | 122.5 (4 7/8) | 122.5 (4 7/8) | 135 (5 3/8) | 190 (7 1/2) | 190 (7 1/2) |
| Dimension **C** | mm (in) | 931.6 (36 5/8) | 931.6 (36 5/8) | 931.6 (36 5/8) | 910.6 (35 7/8) | 910.6 (35 7/8) | 872.6 (34 3/8) | 872.6 (34 3/8) |
| Dimension **D** | mm (in) | 177.5 (7) | 187.5 (7 3/8) | 187.5 (7 3/8) | 224.5 (8 7/8) | 224.5 (8 7/8) | 271.5 (10 5/8) | 271.5 (10 5/8) |
| Dimension **E** | mm (in) | 69.0 (2 3/4) | 79.0 (3 1/8) | 79.0 (3 1/8) | 116.0 (4 5/8) | 116.0 (4 5/8) | 163.0 (6 1/2) | 163.0 (6 1/2) |

### POSITION OF BOILER

Minimum clearances required from walls or other fixed objects to allow for the free access of combustion air are shown in Table 3 above.

However, for maintenance purposes we suggest a minimum rear clearance of 50mm.

Any combustible material adjacent to the boiler and its flue system must be so placed or shielded as to ensure that its temperature does not exceed 65 °C (150 °F).

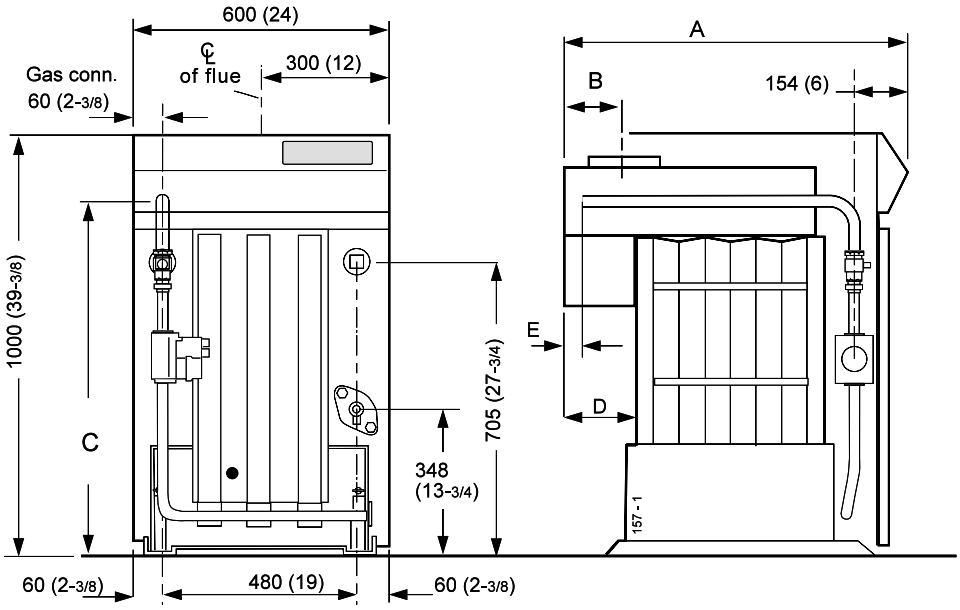


### MULTIPLE BOILER INSTALLATIONS

The minimum installation clearances must conform to the dimensions given below:

**CX 40, 50, 60, 70 & 80**
Clearance between boilers = 50mm
Clearance at both ends of the multiple installation = 50mm*

**CX 90 & 100**
Clearance between boilers = 100mm
Clearance at both ends of the multiple installation = 100mm*

**Rear clearance:** sufficient clearance should be given at the rear of the boiler for connection of gas and water pipework.

*Additional clearance is required for access at either end of the installation.

achieved either by provision of an adequate bypass circuit or by ensuring that a zone of suitable size is open for circulation during this period by relevant control of zone valves or pumps.

The wiring diagrams in Frames 16,17 &18 illustrate the control methods for achieving the above.

3. Pump selection should take account of the hydraulic resistance given in Graph 2.

**Table 4 - Flow rates for fully pumped systems**

| Boiler | Minimum flow rates for a temperature difference of 35°C (63°F) l/s | g.p.m. |
|---|---|---|
| CX 40 | 0.28 | 3.7 |
| CX 50 | 0.34 | 4.5 |
| CX 60 | 0.41 | 5.4 |
| CX 70 | 0.48 | 6.3 |
| CX 80 | 0.55 | 7.3 |
| CX 90 | 0.62 | 8.2 |
| CX100 | 0.68 | 9 |

## PUMP POSITIONS

Whenever practically possible the circulating pump(s) should be positioned so that it pressurises the system being served. The vertical distance between the pump(s) and any cold feed and expansion cistern MUST comply with the pump manufacturers requirements in order to avoid cavitation. These requirements override the information given in Frame 3 if the static head required for the pump(s) exceeds that required for the boiler.

### MINIMUM FLOW OF WATER - Refer to Table 4

The system design must provide for an adequate flow rate through the boiler at all times when the boiler is firing. The minimum flow rate should correspond to a temperature difference across the boiler flow and return of 35 °C (63 °F), assessed at catalogue rating.

## WATER TREATMENT FOR HOT WATER AND HEATING BOILERS

There is a basic need to treat the water contained in all heating and indirect water systems, particularly open vented systems. It is assumed, incorrectly, that because boilers are operating in conjunction with what is apparently a closed circuit an open vented system will not, under normal circumstances, allow damage or loss of efficiency due to hardness salts and corrosion once the initial charge of water has been heated up a few times.

## 3 OPEN VENTED SYSTEMS - Minimum static head requirements

Particular reference should be made to BS. 6644: Section 2; Subsection 10 and Guidance note PM5 "Automatically controlled steam and hot water boilers" published by the Health and Safety Executive.

The information and guidance given below is not intended to override any requirements of either of the above publications or the requirements of the local authority, gas or water undertakings.

Other British Standards applicable are BS.5422 and BS.6700.

The information provided is based on the following assumptions:

1. An independent open vent/safety pipe connection is made to the redundant boiler flow tapping or is positioned immediately after the system flow pipe connection to the header, as shown.
2. An independent cold feed/expansion pipe connection is made to the redundant boiler return tapping. Cold feed/expansion pipe connections made to the pumped system return will result in an increase in the static head requirement, caused by the additional resistance of the distributor tube. Surging may also increase.
3. The maximum flow rate through the boiler is based on a temperature difference of 11 °C at full boiler output and the circulating pump is positioned in the flow to the system.
4. The boiler is at the highest point of circulation in the system. Systems designed to rise above the boiler flow tappings will automatically require a minimum static head higher than that shown.
5. The position of the open vent/safety pipe above the expansion cistern water level is given as a guide only. The final position will depend upon the particular characteristics of the system. Pumping over of water into the expansion cistern must be avoided.

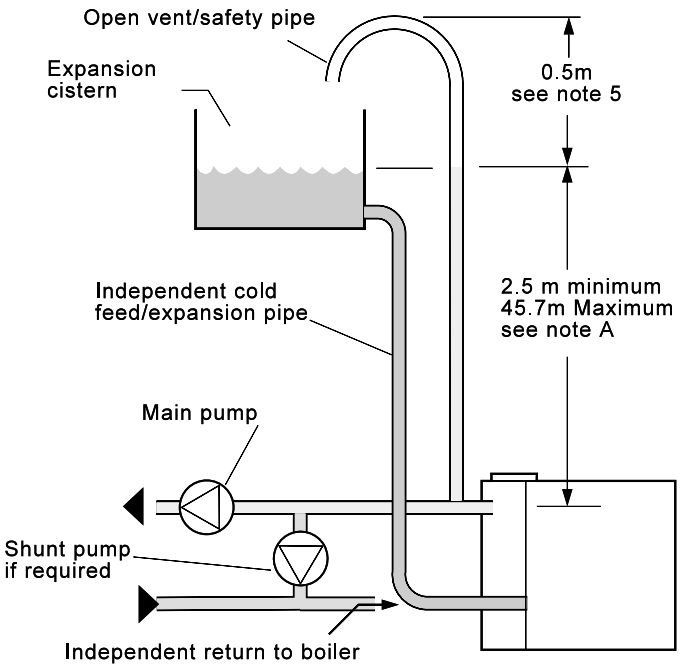


**Note A.** *This minimum height must be increased, if necessary, to comply with the minimum head required by the pump manufacturer in order to avoid cavitation.*

**Note B.** *This diagram does not show safety valves, water flow switches, etc., necessary for the safe operation of the system.*

1mm of lime reduces the heat transfer from metal to water by 10%.

In practice the deposition of these salts is liable to cause noises from the boiler body or even premature boiler failure. Corrosion and the formation of black iron oxide sludge will ultimately result in premature radiator failure.

Open vented systems are not completely sealed from the atmosphere if proper venting and expansion of system water is to be achieved. The same tank is used to fill the system with water and it is through the cold feed pipe that system water expands into the tank when the boiler passes heat into the system. Conversely, when the system cools, water previously expelled is drawn back from the tank into the system together with a quantity of dissolved oxygen.

Even if leakage from the heating and hot water system is eliminated there will be evaporation losses from the surface of the tank which, depending upon ambient temperature, may be high enough to evaporate a large portion of the system water capacity over a full heating season.

There will always be corrosion within a heating or hot water system to a greater or lesser degree, irrespective of water characteristics, unless the initial fill water from the mains is treated. Even the water in closed systems will promote corrosion unless treated. For the reason stated, **Caradon Plumbing Limited** strongly recommend that, when necessary, the system is thoroughly cleaned, prior to the use of stable inhibitor, which does not require continual topping up to combat the effects of hardness salts and corrosion on the heat exchangers of the boiler and associated systems.

**Caradon Plumbing Limited** advise contact directly with specialists on water treatment such as:

Fernox Manufacturing Co. Ltd.,
Tandem House, Marlowe Way,
Croydon.
Surrey CRO 4XS
Tel 0870 5601 5000

or

Sentinel Division
Betz Dearborn Ltd.,
Widnes,
Cheshire, WA8 8UD
Tel. 0151 424 5351.

## INSTALLATION REQUIREMENTS

The appliance must be installed by a CORGI (❀) registered installer.

The installation of the boiler must be in accordance with the relevant requirements of the Gas Safety Regulations, current I.E.E. (BS.7671) Regulations, Model Water Bye-laws, local water authority bye-laws and it should also comply with any relevant requirements of the local gas region, local authority and the relevant British Standard Codes of practice and building regulations.

### FOR SMALL PIPE INSTALLATIONS:

BS. 6891; Installation of low pressure pipework

### FOR LARGE PIPE INSTALLATIONS:

**British Gas Publications:**

IM11: Flues for Commercial and Industrial Gas Fired Boilers and Air Heaters.

**Gas Installations**

IGE-UP-1: Purging Procedures of Non-domestic Gas Installations. Soundness Testing Procedures for Industrial and Commercial.

IGE-UP-2: Guidance notes on the Installation of Gas Pipework, Boosters and Compressors in Customer's Premises Equal to or Greater than 25mm (Non-domestic).

BS.6644: Installation of Gas Fired Hot Water Boilers 60kW to 2MW.

CP341: Water Supply.

CP342:2: Centralised Hot Water Supply.

Model Water Bye-laws

Manufacturers notes must not be taken, in any way, as overriding statutory obligations.

## 4 SEALED (PRESSURISED) SYSTEMS

### Working pressure 4.5 bar maximum.

Particular reference should be made to BS. 6644: Section 2; Subsection 11 and Guidance note PM5 "Automatically controlled steam and hot water boilers" published by the Health and Safety Executive.

The information and guidance given below is not intended to override any requirements of either of the above publications or the requirements of the local authority, gas or water undertakings.

In general commercial closed pressurised systems are provided with either manual or automatic water make up.

On both instances it will be necessary to fit automatic controls intended to protect the boiler, circulating system and ancillary equipment by shutting down the boiler plant if a potentially hazardous situation should arise.

Examples of such situations are low water level and operating pressure or excessive pressure within the system. Depending on circumstances, controls will need to be either manual or automatic reset. In the event of shutdown both visual and audible alarms may be necessary.

Pressure vessels used must comply with BS. 4814 and must be sized on the basis of the total system volume and initial charge pressure.

Initial minimum charge pressure should not be less than 0.5 bar (7.2 psi) and must take account of static head and specification of the pressurising equipment. The maximum water temperatures permissible at the point of minimum pressure in the system is specified in Guidance Note PM5.

When make-up water is not provided automatically it will be necessary to fit controls which shut down the plant in the event of the maximum system pressure approaching to within 0.35 bar (5 psi) of safety valve setting.

Other British Standards applicable to commercial sealed systems are:-

BS. 6880: Part 2.
BS. 1212
BS. 6281: Part 1
BS. 6282: Part 1
BS. 6283: Part 4

## FOUNDATION

The boiler must stand on a non-combustible floor (i.e. concrete or brick) which must be flat, level and of a suitable load bearing capacity to support the weight of the boiler (when filled with water) and any ancillary equipment.

If the boiler is mounted on a plinth then the dimensions must exceed the plan area of the boiler by at least 75mm on each side.

## VENTILATION

Safe, efficient and trouble-free operation of conventionally flued gas boilers is vitally dependent on the provision of an adequate supply of fresh air to the room in which the appliance is installed. Ventilation by grilles communicating directly with the outside air is required at both high and low levels. The minimum free areas of these grilles must be according to the following scale:

**Table 5 - Ventilation Requirements**

| Total input rating of boilers | Position of air vents | Air vent areas (air direct from outside) |
|---|---|---|
| Upto 2 MW | HIGH LEVEL | 270 $cm^2$ plus 2.25 $cm^2$ per kW in excess of 60 kW total rated input |
| Upto 2 MW | LOW LEVEL | 540 $cm^2$ plus 4.5 $cm^2$ per kW in excess of 60 kW total rated input |

Position ventilation grilles to avoid the risk of accidental obstruction by blockage or flooding. If further guidance on ventilation is required then consult BS.6644.

## AIR SUPPLY BY MECHANICAL VENTILATION

The supply of air by mechanical means to a space housing the boiler should be by mechanical inlet with natural or mechanical extraction. Mechanical extract ventilation with natural inlet must NOT be used.

Where a mechanical inlet and a mechanical extract system is applied, the design ventilation flow rates should be as in Table 4 of BS.6644.

The requirements for air supply by mechanical ventilation are given in BS.6644.

**Note.** *For mechanical ventilation systems an automatic control should be provided to cause safety shutdown or lockout of the boiler(s) in the event of failure of air flow in either inlet or extract fans.*

**IMPORTANT.** The use of an extractor fan in the same room as the boiler (or in an adjacent, communicating room) can, in certain conditions, adversely affect the safe operation of the boiler. Where such a fan is already fitted (or if it is intended to fit an extractor fan after installation of the appliance) the advice of the Gas Region should be obtained.

Tests for spillage of products from the draught diverter when the extractor fan is running and all doors and windows are shut should be carried out after installation. If spillage is detected, the area of permanent ventilation must be increased.

## CHIMNEY SYSTEM

To ensure the safe and satisfactory operation of the boiler the chimney system (which may be common or individual, in the case of twin or multiple boiler installations) must be capable of the complete evacuation of combustion products at all times. The effective height of the chimney terminal(s) above the boiler outlet(s) must ensure sufficient buoyancy to overcome the resistance of the bends, tees and runs of the flue pipe involved and shall terminate in a down draught free zone. The number of bends and lengths of horizontal flue pipe used should be kept to a minimum in order to reduce gas flow resistance.

Compliance with the recommendations made in BS.6644, British Gas publication IM 11 'Flues for Commercial and Industrial Gas Fired Boilers and Air Heaters' and the' Third Edition of the 1956 Clean Air Act Memorandum' should be strictly observed where applicable.

The chimney design should avoid the formation of excessive quantities of condensate. For this reason it is recommended that all chimneys are insulated and lined. In the case of brick or similar structures a stainless steel rigid or flexible flue liner (grade 304/316) may be used in conjunction with a 50 mm (minimum) thick layer of vemiculite or perlite granules between the liner and the inner skin of the chimney body. Liners should be sealed at both top and bottom.

As the **Concord CX range** of boilers is supplied complete with an integral draught diverter, a diverter MUST *NOT* be fitted within the chimney system.

Drainage points positioned at the bottom of all vertical chimney sections should be provided. Drain pipes should be no less than 25 mm I.D., manufactured from acid condensate resistant material such as stainless steel and be positioned so that pipe runs and discharge points are not subject to the effects of frost and that flue gases cannot leak into the boiler room.

Care should be taken to ensure the specification of the chimney is suitable for the application by reference to the manufacturers literature. **Caradon Plumbing Limited** can offer advice on the design of suitable chimney systems.

## GAS SUPPLY

If there is any doubt regarding the capacity of the gas meter, the available gas pressure, the adequacy of existing service pipes or the size required for new service pipes then the advice of the gas region should be requested.

Installation pipework should be fitted and tested for gas soundness in accordance with BS. 6891;

IGE-UP-1 for small installations
IGE-UP-2 for large installations.

The local gas region must be consulted if it is necessary to employ a gas pressure booster.

## ELECTRICAL SUPPLY

***WARNING.*** This appliance must be efficiently earthed.

A 230 V - 50 Hz mains supply is required, fused at 5 amps.

Wiring external to the appliance MUST be in accordance with the I.E.E. (BS. 7671) Wiring Regulations and any local regulations which apply.

For details of connections refer to Frame 14.

## 5 CONCORD CX BOILER ASSEMBLY - Exploded view

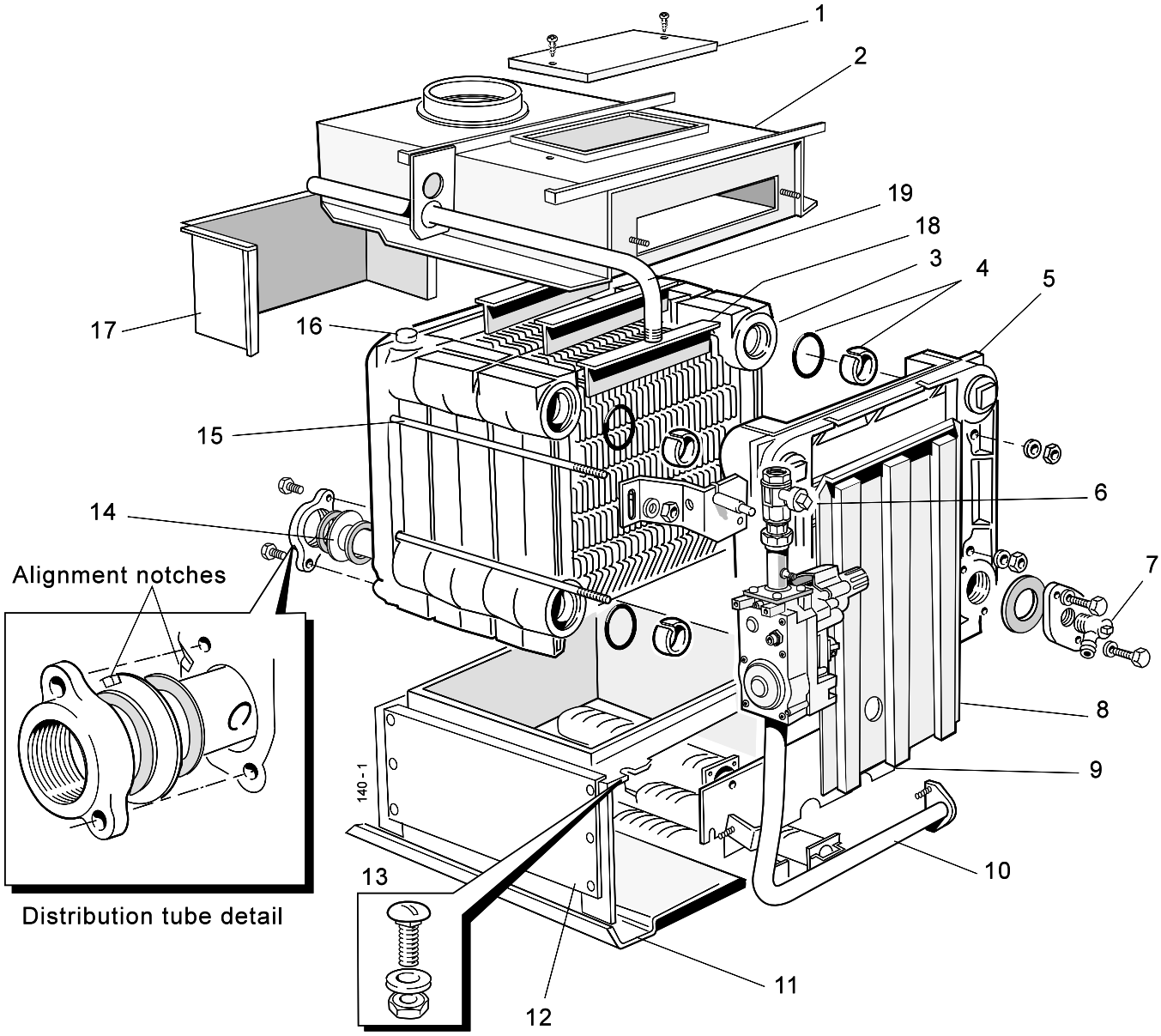


**Legend**

1. Cleanout cover
2. Collector hood
3. Middle section
4. Section alignment rings & 'O' rings
5. End section
6. Gas cock
7. Drain cock
8. NOx duct
9. Front plate
10. Burner manifold assy.
11. Base plate
12. Combustion chamber
13. Section bolt
14. Distribution tube
15. Tie rods
16. Thermostat pocket
17. Spillage skirt
18. Flueway baffles
19. Gas pipe

## 6 PACKAGING

Check that all these packages are complete and have been correctly received on site.

Factory assembled boilers are despatched from the works as fully packaged units comprising:

1. Assembled boiler body (with distributor tube) on a wooden pallet base enclosed in a wooden crate.
2. Carton containing the casing, fastenings and flue brush.
3. Carton containing the installation pack and instruction books.
4. Carton containing the control box.

**JACKET PACK contains:**

- Front panel ..... 1 off
- Side panel ..... 2 off
- Top panel ..... 1 off
- Top support bracket ..... 2 off
- Flue brush ..... 1 off
- Jacket hardware pack ..... 1 off

**INSTALLATION HARDWARE PACK contains:**

- M10 washer ..... 4 off
- Split pin ..... 1 off
- Strain relief bush ..... 1 off
- M10 x 25 Hex. Hd. screw ..... 2 off
- M10 x 35 Hex. Hd. screw ..... 2 off
- Gasket EPDM Type EP600 ..... 3 off
- Plug 2" taper Sq.Hd. ..... 3 off
- Installation/Service instructions ..... 1 off
- User's instructions ..... 1 off
- Flange RC 1" ..... 1 off
- 2" BSP Flange (distributor tube) ..... 1 off
- 2" Installation pipe (handling bars) ... 2 off
- Thermostat pockets ..... 2 off

## 7 PACKAGING AND BOILER REMOVAL

1. Remove the jacket carton and outer packaging frame.
2. Remove the jacket pack support frame.
3. Remove the distributor tube pack, controls package and installation pack.
4. Remove the 2" BSP steel handling bars from the installation pack.
5. Remove the 4 base bolts holding assembly to the packaging base.
6. Remove the wood screws securing the front cross member on the packaging base.
7. Remove the gas cock by unscrewing the union and screw in the handling bars into the 2 front tappings. *Protect the exposed inlet gas union from ingress of dirt.*
8. Knock out the front spacing blocks from the packaging base, ensuring that the boiler assembly is supported, using 2" BSP handling bars.
9. Using the handling bars, manoeuvre the boiler forwards on the packaging base and slide over collapsing base on to the floor.

   **Note.**
   *Before manoeuvring the boiler into its final position see Frame* 8

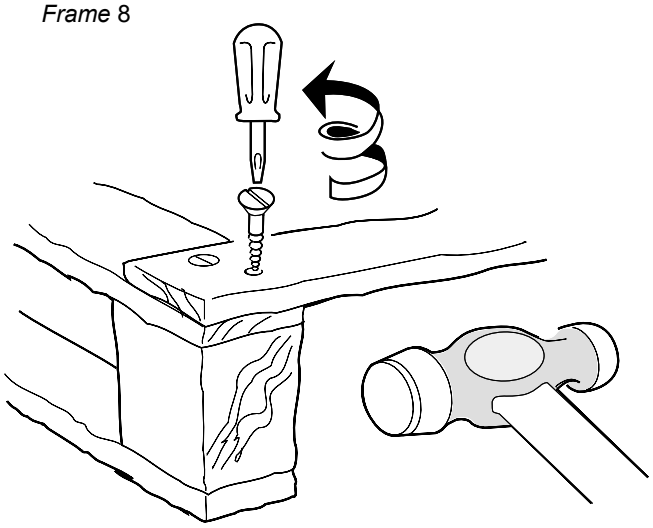

## 8 BOILER ASSEMBLY

1. Fit the distributor tube (supplied with the boiler) into one of the return connections. That is one of the rear lower ports - refer to Frame 5.

   Fit the flange, using the M10 x 35mm screws and washers provided.

   Ensure that the notch in the tube flange sits correctly into the groove on the section and that the 2 sealing gaskets are correctly assembled on the tube.

2. Fit the 1" tapped flange to the other lower rear connection, using the gasket and M10 x 25mm screws and washers provided.

3. Temporarily screw the 2 handling bars (2" pipe) into the top tappings and manoeuvre the boiler into position.

4. Complete the system connections, using suitable jointing compound as follows:

   **a.** The flow connection may be made to either of the rear top tappings (either at the same side as the return or opposite the return).
   To avoid air locks, any reduction in pipe size must be made in the vertical plane or achieved by using eccentric bushes.

   **b.** The 1" tapping in the redundant return flange may be used for the cold feed on an open system or connection of a pressure vessel if on a sealed system.
   If not required for this purpose it should be plugged.

   **c.** Fit the 2 thermostat pockets. Refer to Frame 9.

   **Note.** *Frame 9 shows the relationship between the overheat thermostat and the flow tapping.*

   **d.** Complete the water connections by plugging the 2 front top tappings with the 2" BSP plugs provided.

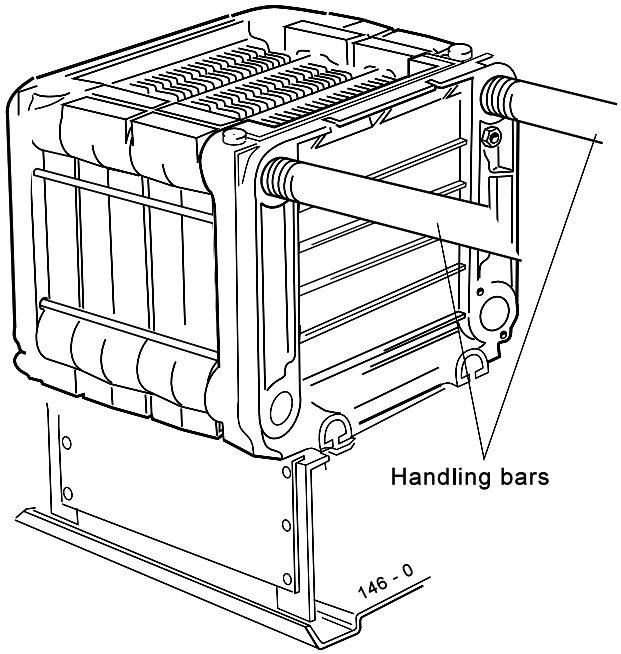


## 9 SYSTEM CONNECTIONS

One flow and return connection should be made to the rear of the boiler - either on one side or opposite sides.

The distributor tube and gaskets, supplied with the boiler, must be connected into the pumped return connection. Refer to Frame 8.

Two thermostat pockets are supplied in the installation pack. These must be fitted in the 2 top 1/2" BSP tappings at either side of the rear of the heat exchanger.

Position the overheat thermostat phial into the thermostat pocket at the opposite side to the flow pipe. The illustrations below show the rear of the boiler with the flow and relative overheat thermostat positions.

Ensure that the overheat thermostat phial and control sensor are correctly secured in the pockets. Refer to Frame 13.

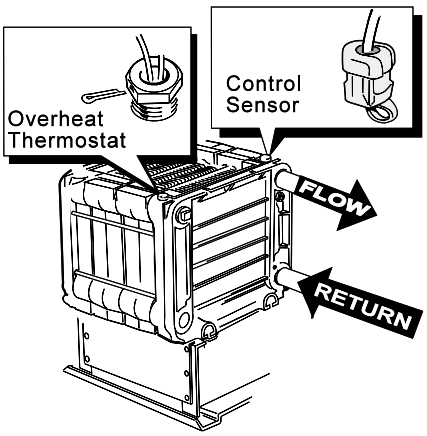


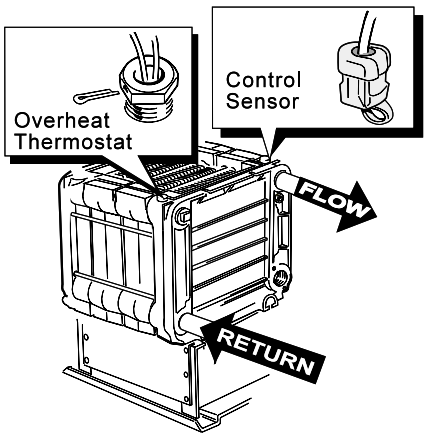


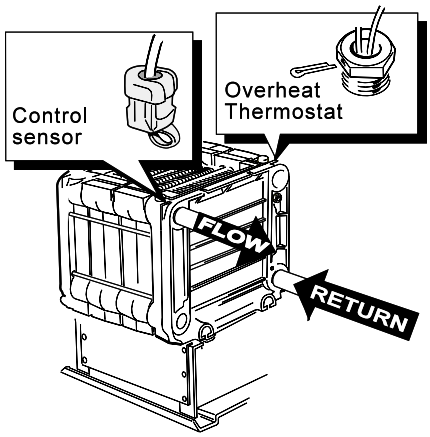

## 10 FLUE CONNECTION

1. Complete the flue connection.
2. The boiler is designed to accept flues to BS. 835 and should be sealed with an approved boiler putty.

## 11 GAS CONNECTION

1. Connect the gas supply to the gas inlet pipe at the rear LH side of the boiler.
2. Table 2 gives details of the inlet connection size and the minimum working pressures.

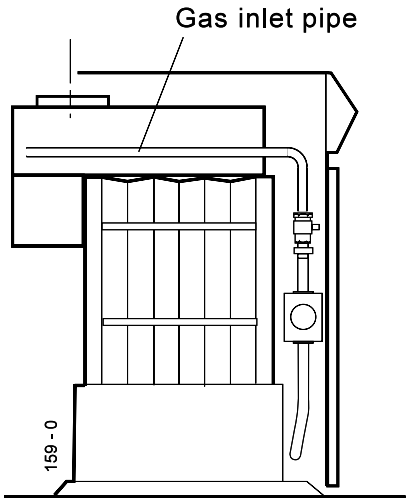


## 12 CASING ASSEMBLY

1. Unpack the control box from its carton and release the temperature sensing probe strapped to the back of the box.

   The boiler casing should now be fitted.

   A jacket hardware pack contains all the screws required for assembly.
2. Slide the bottom of the side panels on to the location buttons on the base tray.
3. Screw the side panel to support angles. Repeat for the other side.

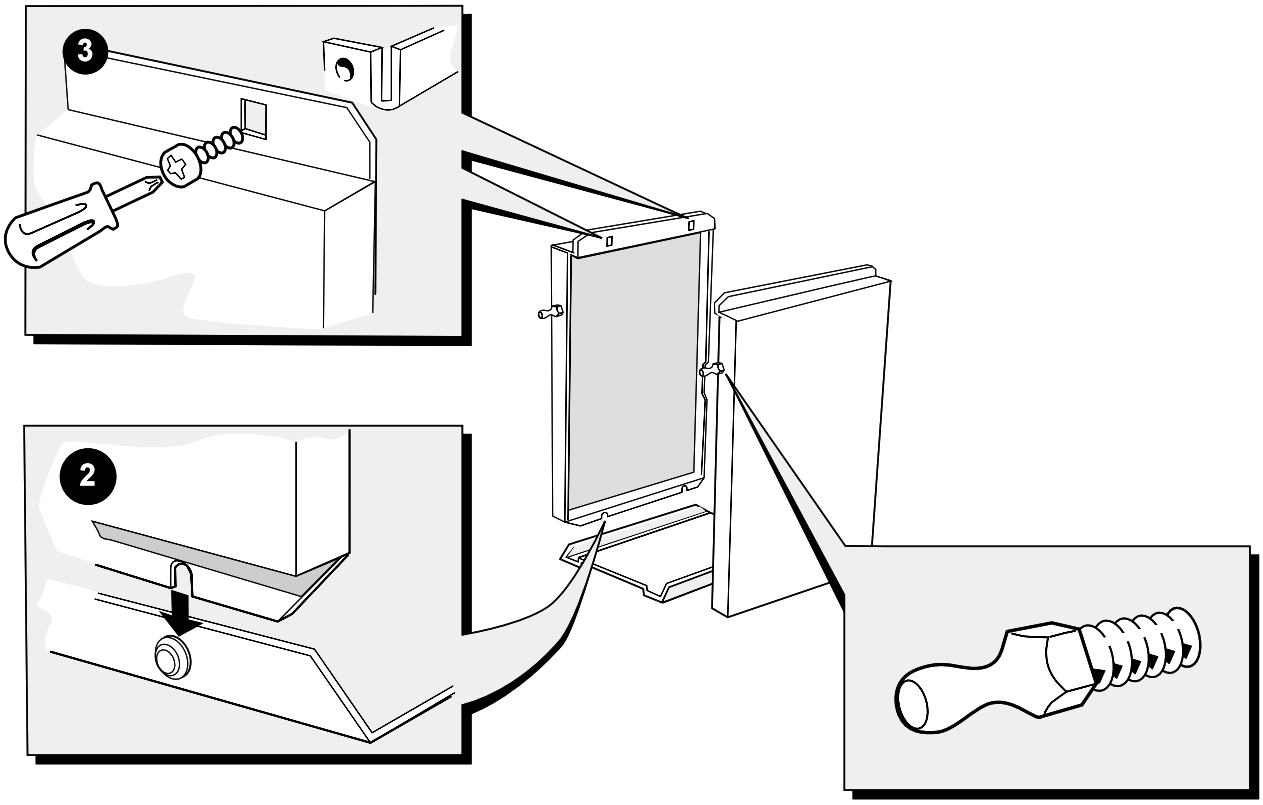

## 13 CASING ASSEMBLY - continued

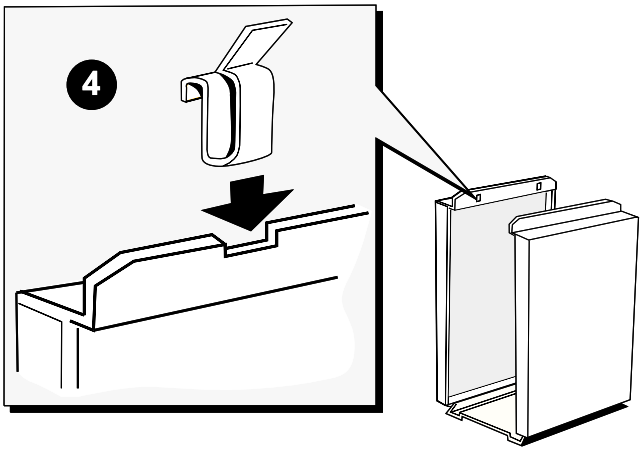


4. Fit 3 clips to the top of each side panel.
5. Fit the spire clips to the side casing panels.
6. Hook on the control box to the side panels. Screw in self tapping screws at the bottom of the control box to fix it to the side panels.

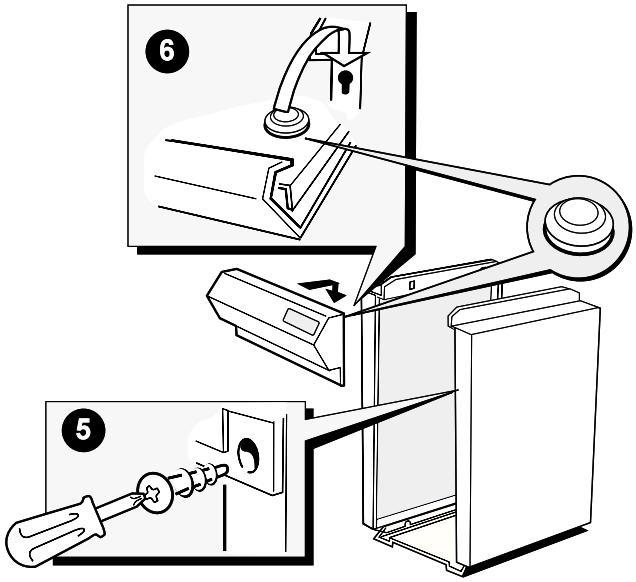


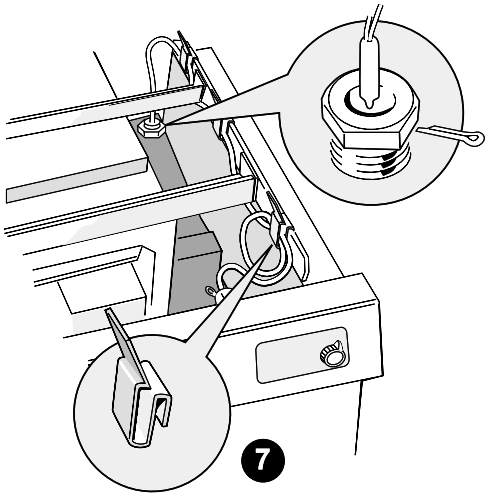


7. Route the thermostat capillary through the cable clips as shown. Ensure the phial is correctly seated in the correct pocket opposite side to the flow connection. Refer to Frame 9. Secure with the split pin provided.

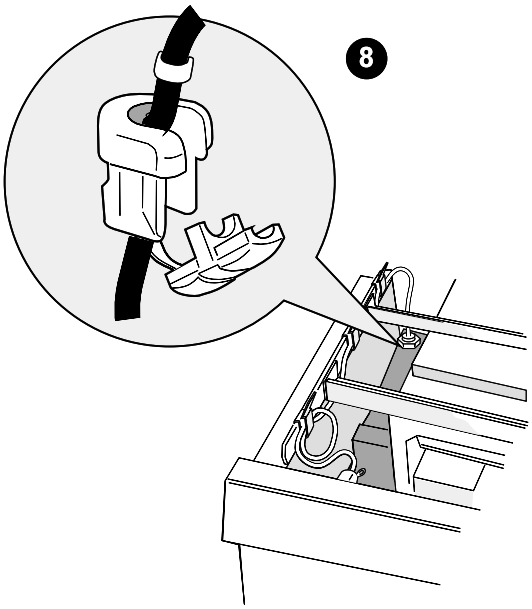


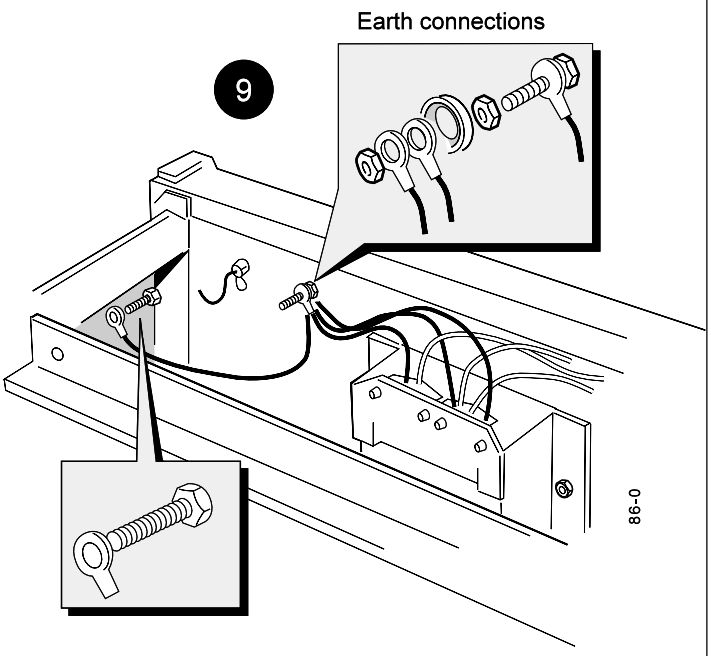


8. Route the temperature sensing probe through the cable clips provided and into the thermostat pocket adjacent to the flow connection.

   Fit the plastic Heyco bush over the sensor lead at the line shown and insert it into the thermostat pocket. Ensure that the Heyco bush is correctly located.

9. Fit earth leads as shown

## 14 ELECTRICAL CONNECTIONS

Connection must be made in a way that allows complete isolation of the electrical supply - such as a double pole switch, having a 3mm (1/8") contact separation in both poles, or a plug and socket serving only the boiler and system controls. The means of isolation must be accessible to the user after installation.

This should serve only the boiler, together with its controls and pumps. The unswitched live supply, which the boiler requires to allow the pump overrun facility to operate should be controlled by the above switched/fused supply, but should connect from there directly to the boiler and not via any automatic time or temperature controls.

The switched live supply should be subject to control by time and temperature controls in the usual way.

The main pump MUST be wired back to the boiler control box.

The mains supply to the boiler must be wired into the boiler terminals L1, N on the 'plug in' connector attached to the gas valve lead. The earth should be wired to the earth post as shown in Frame 13.

The control box incorporates a pump overrun device which is necessary to dissipate residual heat after plant shutdown. It is essential that the main pump (and shunt pump if used) is wired to the pump terminals marked L2, N on the 'plug in' connector and the earth to the earth post.

It is also essential that an unswitched live supply (that is a live supply not interrupted by any automatic temperature or time control) is connected to terminal L on the plug-in connector so that the pump overrun facility can operate. Failure to follow this procedure will result in nuisance overheat thermostat action.

If the down draught flue thermostat is to be fitted then the link (marked TTB) should be removed from the plug in connector.

The internal wiring of the boiler control box is shown in Frame 15.

Wiring should be in four core PVC insulated cable, not less than 0.75mm$^2$ (24/0.2mm). All fuses must be ASTA approved to BS. 1362.

The length of the conductors between the cord anchorage and the terminals must be such that the current carrying conductors become taut before the earthing conductor, if the cable or cord slips out of the cord anchorage.

System controls must be wired externally into the live mains lead to the boiler terminal L1. If a frost thermostat is fitted it should be wired across the time switch contacts and if frost is likely then the system should be turned off using the time switch settings - all other controls must be left in the normal running position.

**The earth connection MUST NEVER be omitted.**

Wire the earths as shown in Frame 13.

All wiring between entry at the rear of the boiler and the connection box must be secured neatly under the cable clips provided.
Wiring must never be allowed to come into contact with the hot boiler body.

**REMOTE LIGHTS (optional)**

Remote indication of 'Boiler on', 'Lockout' and 'Overheat' are provided on printed circuit board 'No 6A'. The load should not exceed 1A resistive.
Do not wire these connections in conduit up to the control box as this will make it impossible to remove the control box for servicing and maintenance.

## 15 INTERNAL WIRING

**LEGEND**

| | | | | |
|---|---|---|---|---|
| **b** blue | **br** brown | **y** yellow | **g/y** green/yellow | **v** violet |
| **bk** black | **r** red | **w** white | **or** orange | **pk** pink |

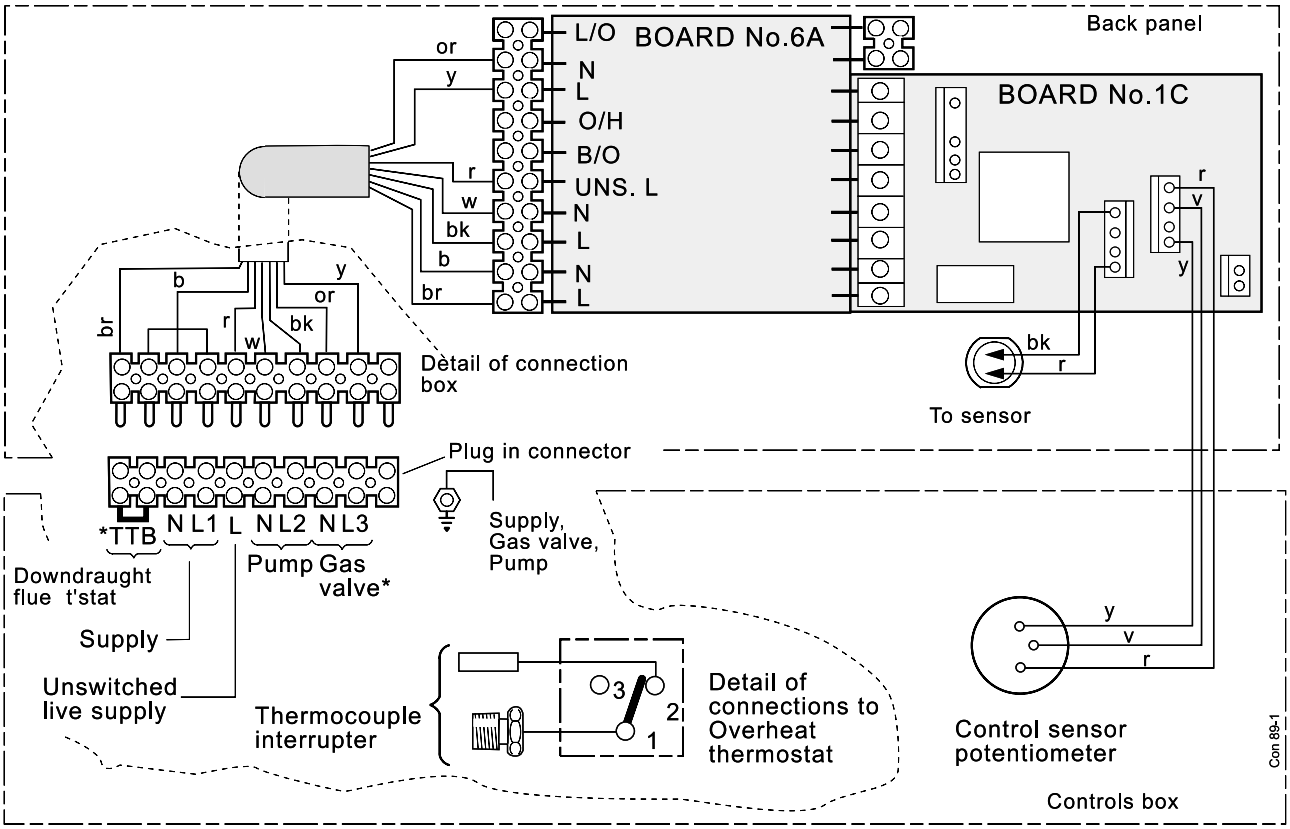


## 16 ZONES WITH BI-DIRECTIONAL MOTORISED VALVES

### IMPORTANT

Terminal L2 may control the appropriate pump(s) directly, provided that the total running or starting current does not exceed 6A (resistive or inductive): if this rating would be exceeded then appropriate switchgear must be used to control the pumps indirectly.

Three zones are illustrated but the principles may be extended as required, provided the above conditions are met. Each relay will then require as many contacts as there are zones.

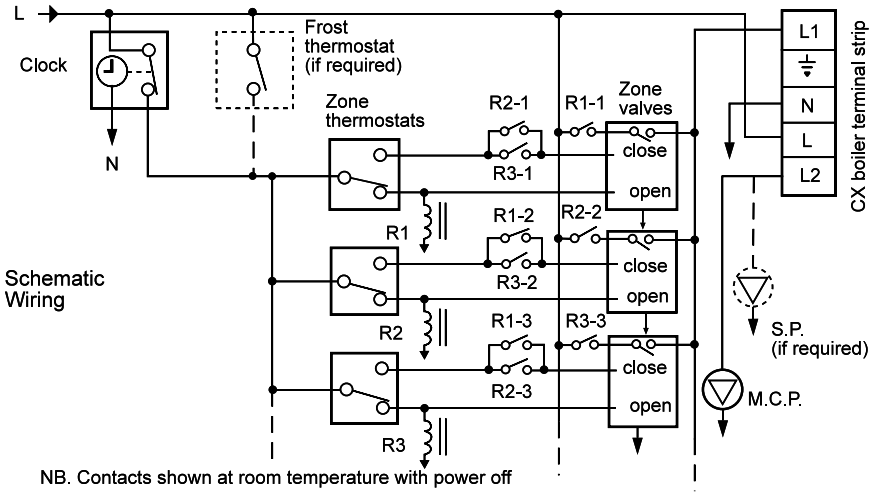


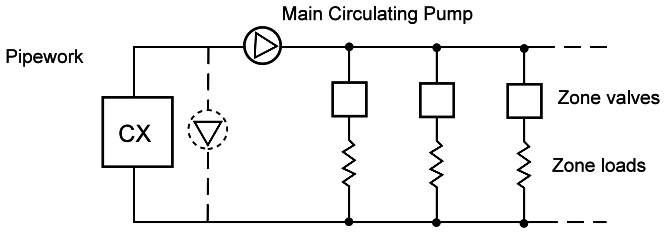


### Overrun

Since any zone may be the load during overrun, all zones MUST individually be able to satisfy the conditions in the foregoing paragraph. If not all zones can do this then consider other means of control detailed on other sheets.

### Normal operation

When any thermostat is satisfied while others are calling for heat, power is available via relay contacts to close the valve for that zone. When all thermostats are satisfied (also when the clock period ends) all relays will be off, so the zone valves which were open will remain open for the pump overrun. At the start of the next call for heat (or the next clock period) valves on zones not calling for heat will motor shut.

## 17 ZONES WITH INDIVIDUALLY PUMPED ZONES (3 zones shown)

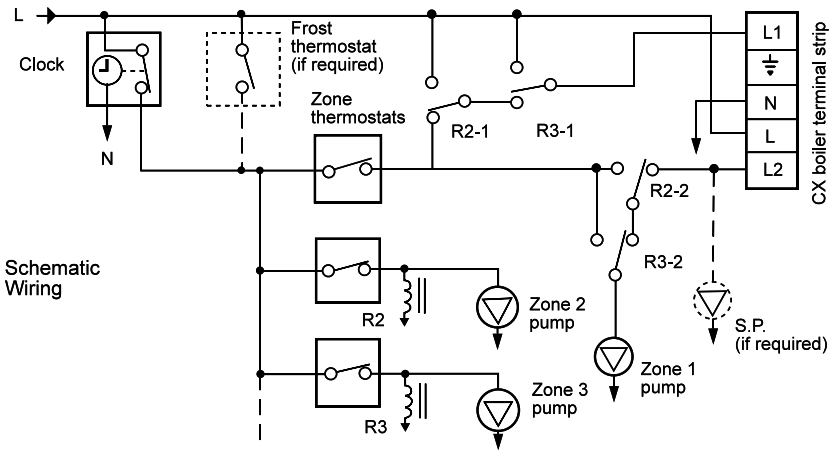


NB. Contacts shown at room temperature with power off

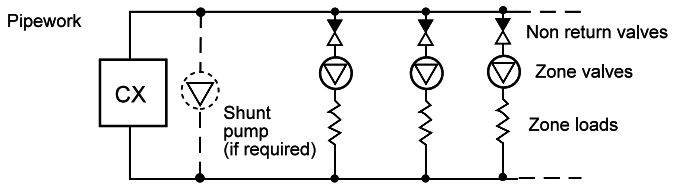


**IMPORTANT**

Terminal L2 may control the appropriate pump(s) directly, provided that the total running or starting current does not exceed 6A (resistive or inductive): if this rating would be exceeded then appropriate switchgear must be used to control the pumps indirectly.

Three zones are illustrated but the principles may be extended as required, provided the above conditions are met. For each zone (except Zone 1) a relay with 2 C/O contacts is required.

**Overrun**
During overrun periods, Zone 1 pump performs the overrun facility; this zone, therefore, must satisfy the conditions in the foregoing paragraphs and Graph 1.

**Normal operation**
During a call for heat on Zone 1 only, Zone 1 thermostat energises the boiler, which in turn energises Zone 1 pump from terminal L2.

During a call for heat on other zones, the appropriate relay directs power to L1 to energise the boiler, at the same time ensuring that Zone 1 pump is controlled by Zone 1 thermostat.

## 18 ZONES WITH SPRING-RETURN MOTORISED VALVES

**IMPORTANT**

Terminal L2 may control the appropriate pump(s) directly, provided that the total running or starting current does not exceed 6A (resistive or inductive): if this rating would be exceeded, then appropriate switchgear must be used to control the pumps indirectly.

Three zones are illustrated but the principles may be extended as required, provided the above conditions are met. Only one relay is required, irrespective of the number of zones.

**Overrun**
During overrun and dormant periods, Zone Valve 1 is held open. This zone, therefore, must satisfy the conditions in the foregoing paragraphs and Graph 1.

**Normal operation**
During a call for heat on Zone 1 only, the boiler energises via Zone 1 thermostat and the normally closed contacts of the relay.

During a call for heat on other zone(s), the relay will be energised by the auxiliary switch on the zone valves. This provides power to energise the boiler. If, in addition, Zone 1 now calls for heat, its thermostat will open Zone 1 valve via the normally open contacts of the relay.

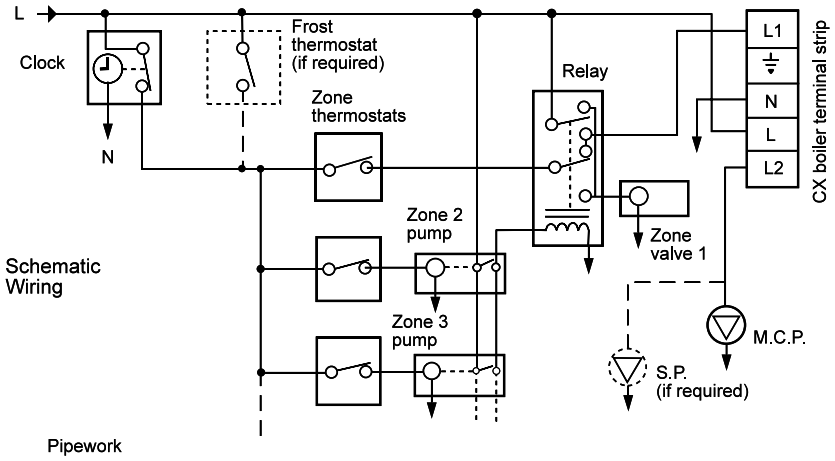


NB. Contacts shown at room temperature with power off

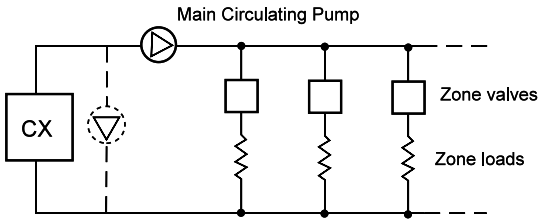


When the clock period ends, Zone valve 1 will (stay) open via normally closed relay contacts to achieve pump overrun.

## 19 COMMISSIONING AND TESTING

### GENERAL

Check that all drain cocks are closed, that any stop valves fitted to the flow and return pipes are open and that the system has been filled and properly vented.

### PURGING

Check that the electricity supply is switched OFF.

Remove the jacket lower front panel.

Extinguish all naked lights and open all doors and windows. DO NOT SMOKE. Check that the gas supply is turned ON at the meter and open the main gas inlet cock. Loosen the union and allow air to be purged from the gas line until gas is smelled. Refer to BS 6891 or IGE-UP-1 for further details. Retighten the union.

### TESTING FOR GAS SOUNDNESS

Close the gas supply cock at the meter.

Remove the screw in the inlet pressure test point (Frames 20/21) and connect a gas pressure gauge to the test point. Take particular care to ensure a gastight connection. Open the gas supply cock at the meter and the appliance gas cock; record the static pressure. Next, close the gas supply cock at the meter. Wait for 1 minute for temperature stabilisation then observe the pressure gauge over a period of 2 minutes.

Any leaks must be cured.

Replace all pressure test point screws.

## 20 INITIAL LIGHTING CX 40, 50 AND 60

***WARNING***. If the pilot light or main burner flame is extinguished, intentionally or otherwise, then no attempt should be made to relight the gas until 3 minutes have elapsed.

1. Switch off the electricity supply to the boiler.
2. Twist the grey button on the gas valve clockwise then release it.
3. Turn the control thermostat knob (1) anti-clockwise to its minimum setting at No.1.
4. Ensure that the main gas inlet cock (3) is open (groove in square head in line with the pipe).
5. Press the overheat thermostat reset button (2).
6. Push in and retain fully depressed the grey button (4), on the gas control (5). At the same time repeatedly push in and release the piezo generator knob (6) to produce a spark at the pilot burner. When the pilot has lit keep the button (4) on the gas valve fully pushed in for a further 20 seconds.
7. If the pilot burner does not remain alight when the button (4) is released, twist the grey button on the gas valve clockwise then release it. Now wait at least 3 minutes and then repeat the lighting procedure from step 5.
8. If the pilot cannot be established, check that the pilot burner flame correctly envelops the thermocouple tip by 10-13 mm (1/2"). If not, adjust the pilot burner pressure as described under 'Pilot Burner Pressure'.
9. Check that the thermocouple lead connections at the gas control and at the boiler limit thermostat are clean and secure.
10. With the pilot flame established ensure that all external system controls (time switch, room thermostat, etc.) are in the ON position.
11. Turn the control thermostat knob (1) to the required setting and switch on the electricity supply. The main burner will now light.
12. When the boiler has lit check all gas connections for tightness with leak detection fluid.
13. Note that the gas control opens progressively. The first stage gives a low opening pressure which is progressively increased over a period of approximately 10 seconds to the full operating pressure.
14. Turn off the power supply to the boiler at the mains.

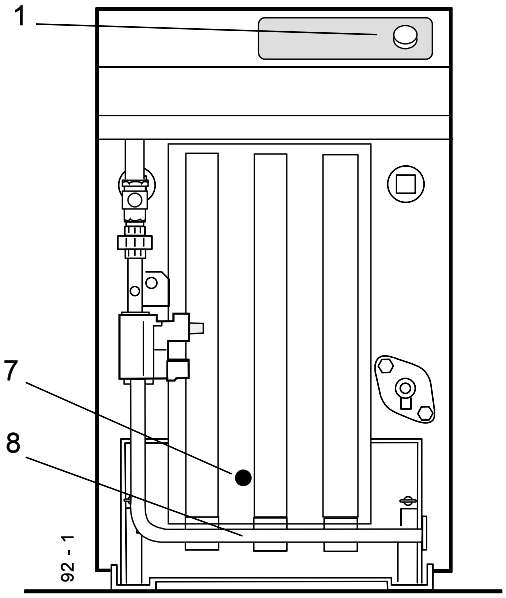


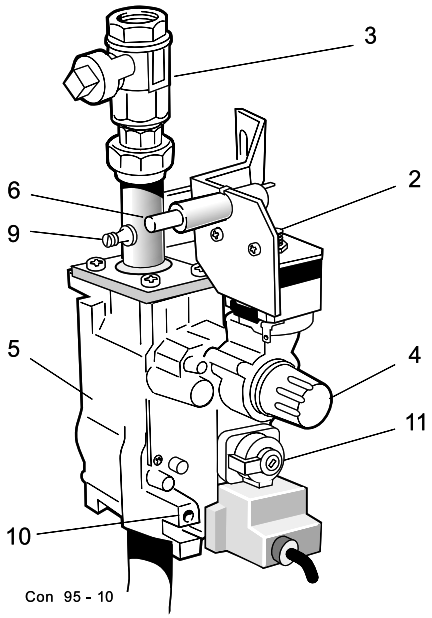


**LEGEND**

1. Thermostat knob
2. Overheat thermostat reset button
3. Main gas inlet cock
4. Grey button
5. Gas control valve
6. Piezo igniter button
7. Pilot viewing hole
8. Burner setting pressure test point
9. Inlet pressure test point
10. Pilot burner pressure setting adjuster
11. Manifold pressure setting adjuster

## 21 INITIAL LIGHTING CX 70, 80, 90 AND 100

1. Switch off the electricity supply to the boiler.
2. Press down and release the red button (4) marked * on the gas control valve (6).
3. Turn the control thermostat knob (1) anti-clockwise to its minimum setting at No. 1.
4. Ensure that the main gas inlet cock (3) is open (groove in square head in line with the pipe).
5. Press the overheat thermostat reset button (2).
6. Push in and retain fully depressed the white button (5), marked * on the gas control (6). At the same time repeatedly push in and release the piezo generator knob (7) to produce a spark at the pilot burner. When the pilot has lit keep the button (5) on the gas valve fully pushed in for a further 20 seconds.
7. If the pilot burner does not remain alight when the button (5) is released then press and release the red button (4). Now wait at least 3 minutes and then repeat the lighting procedure from step 5.
8. If the pilot cannot be established, check that the pilot burner flame correctly envelops the thermocouple tip by 10 - 13 mm (1/2"). If not, adjust the pilot burner pressure as described under 'Pilot Burner Pressure'.
9. Check that the thermocouple lead connections at the gas control and at the boiler limit thermostat are clean and secure.
10. With the pilot flame established, ensure that all external system controls (time switch, room thermostat, etc.) are in the ON position.
11. Turn the control thermostat knob (1) to the required setting and switch on the electricity supply. The main burner will now light.
12. When the boiler has lit check all gas connections for tightness with leak detection fluid.
13. Note that the gas control opens progressively. The first stage gives a low opening pressure which is progressively increased over a period of approximately 10 seconds to the full operating pressure.
14. Turn off the power supply to the boiler at the mains.

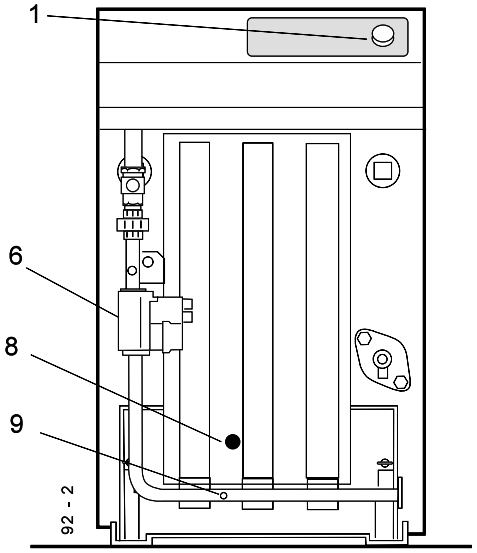


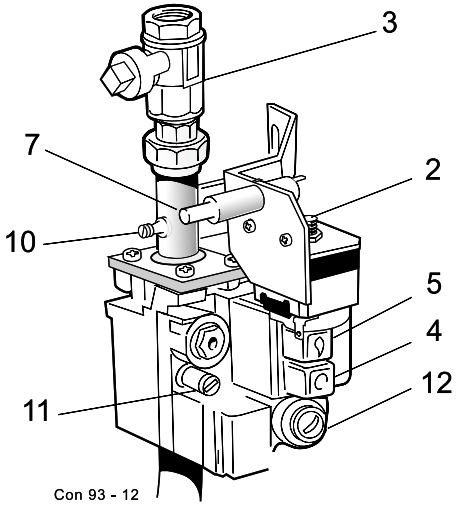


**LEGEND**

1. Thermostat knob
2. Overheat thermostat reset button
3. Main gas inlet cock
4. Stop button
5. Start button
6. Gas control valve
7. Piezo igniter button
8. Pilot viewing hole
9. Burner setting pressure test point
10. Inlet pressure test point
11. Pilot burner pressure setting adjuster
12. Manifold pressure setting adjuster

## 22 GAS PRESSURE

### MANIFOLD PRESSURE

The manifold setting pressure must now be checked and adjusted as necessary.

Commence the adjustment procedure (running on pilot only) with the system cold, on full load and with all temperature controls set at maximum. This will ensure, as far as possible, that thermostatic shutdown does not interfere whilst the pressure is being checked and adjusted. Remove the screw in the manifold setting pressure test point and securely connect a suitable gas pressure gauge.

Turn on the mains to light the boiler and allow it to operate for about 15 minutes to stabilise the burners. Check the pressure and adjust it to the figure shown in Table 1 for the appropriate boiler size. The location of the manifold pressure setting adjuster on the gas control is shown in Frames 20 & 21. Remove the dust cover over the adjuster and, using a small screwdriver, turn the screw beneath clockwise to increase or anti-clockwise to decrease the pressure. The pressures quoted in Table 1 are given to facilitate speedy approximate adjustment of the gas rate.

After setting to the indicated pressure allow the boiler to operate for about 15 minutes to stabilise then check the gas rate by reference to a watch and the gas meter. (Before doing so make certain that any other gas appliances connected to the same meter are turned off).

The gas rate for each size of boiler is given in Table 1.

A deviation of ± 2% of the quoted figure in the observed gas rate is of no practical importance but any greater variation must be adjusted by increasing or decreasing pressure as required, by small steps, until the correct rate is obtained.

Replace the dust cover when finished, disconnect the gas pressure gauge and replace the blanking screw in the manifold setting pressure test point.

### PILOT BURNER PRESSURE

The pilot burner flame should envelop the thermocouple head by 10 - 13 mm (1/2").

The position of the pilot burner pressure adjuster on the gas control is shown in Frames 20 & 21. Turn the adjustment screw clockwise to decrease, or anti-clockwise to increase, the flame length.

## 23 SPILLAGE CHECK

Check there is no spillage of combustion products from the boiler draught diverter by carrying out a spillage test, as detailed in BS. 5440:1.

## 24 TESTING

Check that the main burner responds correctly to manual on/off operations of any controls fitted in the gas control circuit. Check, in the following manner, the operation of the flame failure safety device:

1. Extinguish the main burner and pilot burner by turning off the main gas inlet cock. Refer to Frames 20 &21.
2. Wait for 11/2 minutes, during the course of which the thermocouple-operated solenoid valve in the gas control (which controls the main and pilot gas flow) will be heard to close.
3. Fit the lower casing front panel.
4. **Important Commissioning / Operating Instructions:**
   *Do not operate this appliance for long periods or take any combustion readings with the casing or any part of the casing removed.*

## 25 ADJUSTMENT OF WATER FLOW RATE THROUGH THE BOILER

When commissioning the heating/domestic hot water system the shunt pump must be adjusted to give the minimum flow rate given in Table 4, when that part of the system intended to be used for dissipation of residual heat only is in operation.

## 26 HANDING OVER

### ROUTINE OPERATION

Full instructions covering routine lighting and operation of the boiler are given on the Lighting and Operation Instruction Label located on the inside of the casing door.

Draw the attention of the boiler owner or his representative to the Lighting and Operating Instruction Label on the inside of the casing door. Give a practical demonstration of the lighting and shutting down of the boiler.

Describe the function of the boiler and system controls and show how they are adjusted and used.

Describe the function of the downdraught thermostat if fitted.

Hand over these and the User's Instructions to the customer and request him/her to keep them in a safe place for ready reference.

**IMPORTANT.** Point out to the owner that the boiler must have regular maintenance and cleaning, at least annually, in order to ensure reliable and efficient operation. Regular attention will also prolong the life of the boiler and should preferably be performed at the end of the heating season.

Recommend that a contract for this work should be made with the regional gas authority or a Corgi registered heating installer.

## 27 SERVICING

**Caradon Plumbing Limited** does not accept any liability resulting from the use of unauthorised parts or the repair and servicing of appliances not carried out in accordance with the Company's recommendations and specifications.

A comprehensive service should be carried out at least once a year. The User is advised to make a contract with the local Gas Region or a CORGI registered heating installer.

***WARNING.*** ALWAYS turn *OFF* the gas supply at the gas cock and switch *OFF* and disconnect the electricity supply to the appliance BEFORE SERVICING OR REPLACING ANY COMPONENTS.

**CLEANING THE BOILER. Refer to Frame 5**

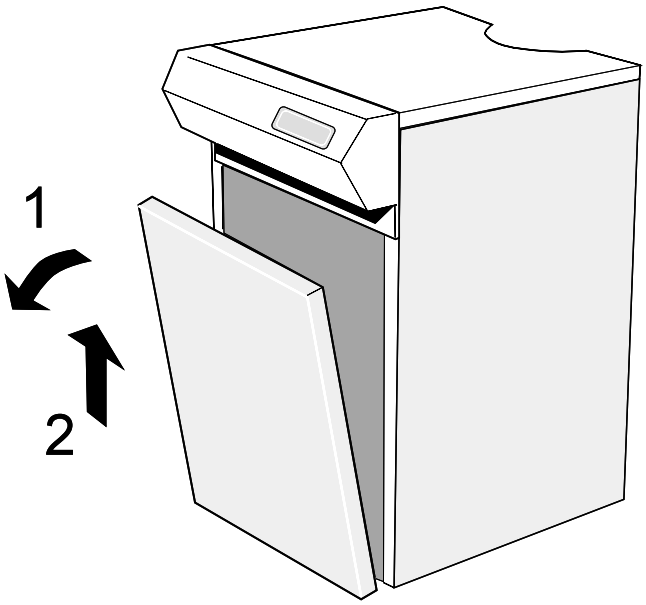


Pull and lift off the lower front panel and top panel from the boiler casing.

Unscrew the extended nuts at the top of the NOx duct behind the control box and lift the NOx duct clear of the burners as illustrated below.

Undo the 4 wing nuts securing the burner front plate. Pull the front plate forwards, at the top, and lift it out - taking care not to damage the insulation.

The left and right hand burners may be lifted out after they have been pushed back to clear the injector.

To remove the centre burner the thermocouple and pilot gas pipe connections at the gas valve must be removed.

Pull off the igniter lead at the igniter. The centre burner may now be removed by pushing it back to clear the injector and lifting it out. Take care not to damage the thermocouple and pilot gas pipe whilst the burner is out of the appliance.

Undo the screws securing the clean out cover and lift it off to give access to the flue ways. Lift out the flue baffles.

Remove all loose deposits from the heat exchanger, especially from between the fins, using the brush provided, and remove all debris from the combustion chamber floor.

Examine the burner assembly. Clean the burner bars by brushing them down with a stiff bristle (not wire) brush. Check each bar carefully to ensure that all flame ports are clear, that there are no cracks and that all surfaces are free from accumulated deposits.

If available, an industrial vacuum cleaner may be useful to assist in this work. When cleaning the burner bars, take care to avoid damage from rough handling to the pilot pipe and thermocouple lead.

Inspect the pilot burner, injector, thermocouple and ignition electrode.

Ensure that they are clean and in good condition.
In particular, check that:

1. The pilot burner is firmly secured.
2. The pilot shield is clean and correctly positioned.
3. The ignition electrode and lead are clean, undamaged, secure and correctly dimensioned. Refer to diagram in Frame 28.
4. The thermocouple tip is NOT burned or cracked.
5. The thermocouple terminals at the gas valve are clean and secure.

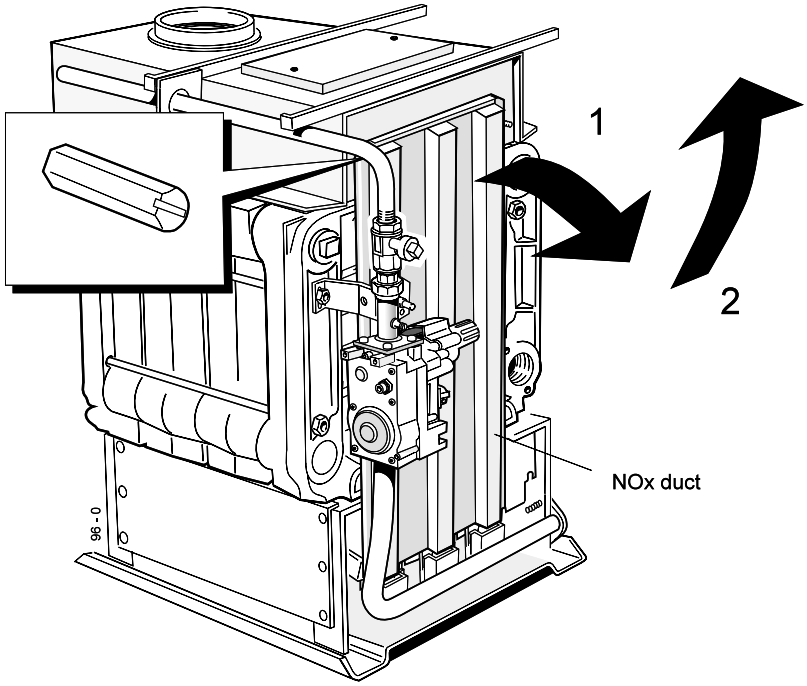


**Note. Casing not shown for clarity**

## 28 SERVICING - continued

6. The pilot burner head is clean and undamaged.

7. Carefully remove the push-on connections to the overheat thermostat, noting their positions, and clean the thermostat spade connections with steel wool.
   Re-assemble in reverse order, remembering to reconnect the overheat thermostat interrupter leads and connections in the correct positions - refer to diagram.

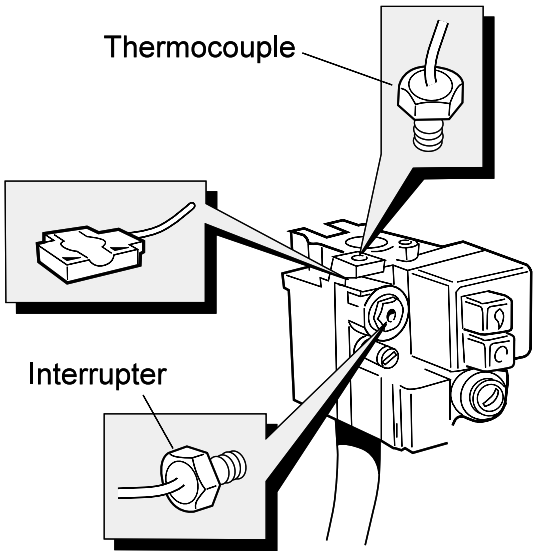


**CX 70, 80, 90 & 100 gas valve**

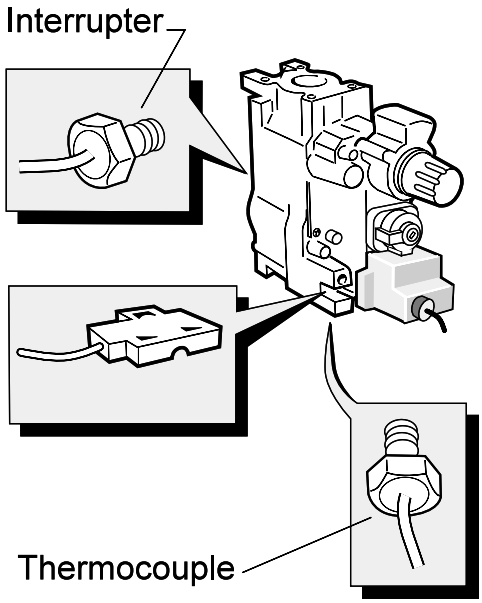


**CX 40, 50, & 60 gas valve**

It will be necessary to fit the centre burner bar first in order to give clearance for the pilot pipe and the thermocouple. Insert the burner flat rear support fully into the central slot at the back of the combustion chamber then lift the front of the burner over the injector and pull forward. Repeat for the other 2 burners.

Ensure that care is taken not to damage the insulation and that the front plate fits behind the burner retaining returns when it is replaced.

Refit the flue baffles, cleanout cover, NOx duct, casing top panel and casing door.

### PILOT BURNER

Check that:

1. The pilot flame covers 10 - 13 mm (1/2") of the thermocouple tip.

2. Turn the adjuster screw (refer to Frame 20 or 21) ANTI-CLOCKWISE to INCREASE the flame and CLOCKWISE to DECREASE it.

### TESTING AFTER SERVICING

After re-assembly, restore the electricity and gas supplies. Light the boiler (refer to the Lighting and Operating Instruction Label on the inside of the casing front panel) and check the gas connections for tightness, as detailed under 'Testing for Gas Soundness' - Frame 19.

Check gas pressures and the gas rate; test as instructed in Frame 22 'Manifold Gas Pressure', 'Pilot Gas Pressure' and Testing'. Adjust any time and temperature controls to User's requirements and remember to reset any time control, which may have been switched off, to the correct time of day. Refit the lower front panel.

Side view: Shown with pilot shield removed

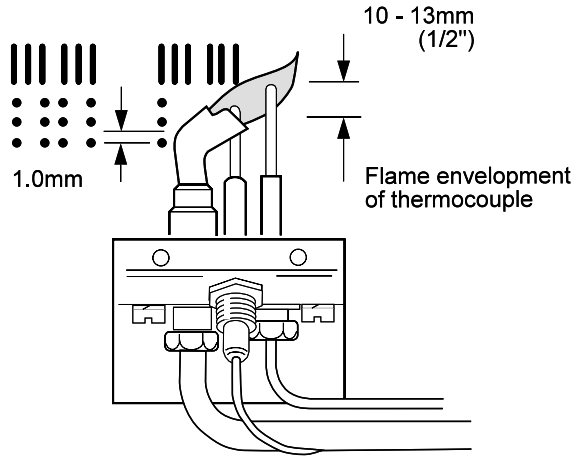


Plan view: Shown with pilot shield inplace

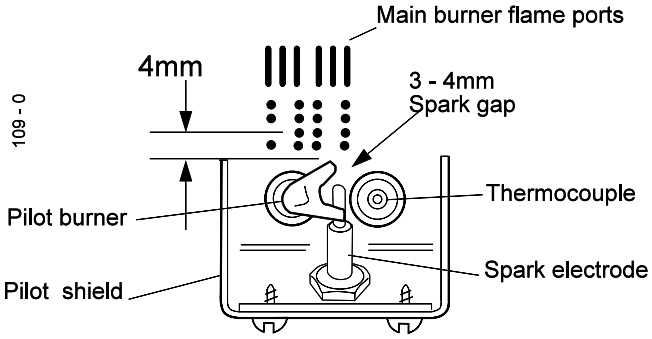


**Pilot and electrode positions**

## 29 REPLACEMENT OF COMPONENTS - Refer to Frames 5, 24, 36 and 37.

**GENERAL**

***WARNING.*** *Always* turn *OFF* the gas supply at the gas inlet cock and switch *OFF* and *DISCONNECT* the electricity supply *BEFORE WORKING* on the appliance.

To facilitate the replacement of components, remove and replace the lower front panel, NOx duct and the burner front plate as necessary -described under 'Servicing'.

## 30 PIEZO UNIT

1. Disconnect the igniter lead from the piezo unit body.
2. Undo the backnut securing the piezo unit to the bracket on the gas control valve.
3. Fit the new unit ensuring that the backnut is fully tightened.
4. Reconnect the igniter lead.

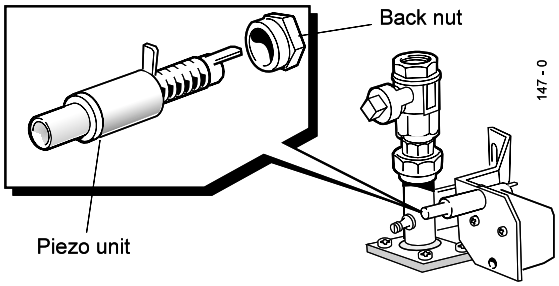


## 31 THERMOCOUPLE

1. Remove the centre burner as previously described in Frame 27.
2. Remove and replace faulty part and refit in reverse order.

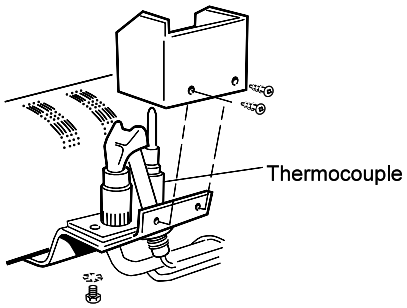


## 32 PILOT BURNER ASSEMBLY

1. Remove the centre burner as previously described in Frame 27.
2. Remove the electrode by undoing the backnut. Undo the 2 screws securing the pilot burner assembly to the pilot burner bracket. Undo the thermocouple and the pilot gas pipe connections at the pilot burner assembly.
3. CAREFULLY remove the pilot burner.
4. Fit the new pilot burner, ensuring that the THERMOCOUPLE is TOWARD THE FRONT and that the pilot burner injector is in position BEFORE reconnecting the pilot pipe.
5. Re-assemble in reverse order, checking that the spark gap is as shown in Frame 28.

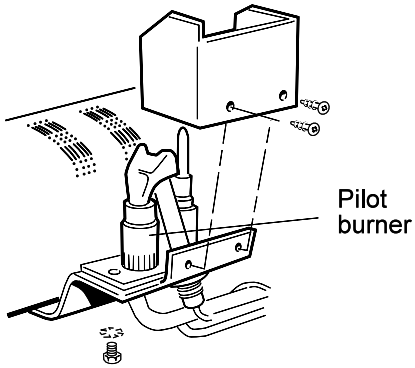


## 33 ELECTRODE / LEAD

1. Remove the centre burner as previously described in Frame 27.
2. Unfasten the backnut retaining the electrode to the pilot burner bracket and fit the new electrode.
3. Re-assemble in reverse order, checking that the spark gap is as shown in Frame 28.

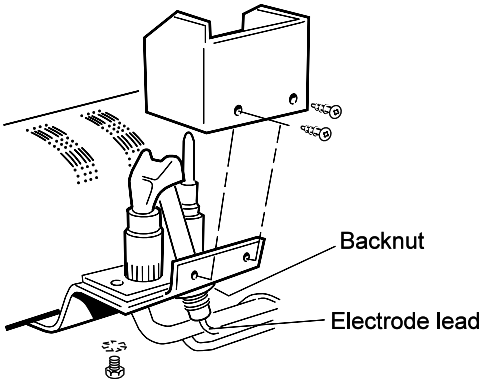

## 34 GAS CONTROL VALVE

1. Undo the thermocouple and pilot gas pipe connections at the gas control valve. Disconnect the interrupter leads to the overheat thermostat.
2. Undo the screw securing the plastic electrical cover on the gas valve and lift it off.
3. Undo the earth connection and pull off the 2 connectors to the gas valve, taking care not to lose the small earth screw and washer.
4. Check that the gas inlet cock is OFF, unscrew the 4 screws on the gas valve inlet flange, the 4 screws on the outlet flange and remove the valve.
5. Replace the gas control valve and re-assemble in reverse order, ensuring that the arrow indicating the direction of flow is in the correct position and that the overheat thermostat connections are in place on the gas valve before reconnecting the thermocouple.
6. Ensure that a new 'O' ring seal is correctly placed in each flange connection.
7. Test for gas soundness.

## 35 MAIN BURNER

1. Remove the NOx duct and burner front plate, as previously described in Frame 27.
2. Both left and right hand burners can be removed by sliding each one back to clear the injector, and then lifting out.
3. To exchange the centre burner disconnect the pilot pipe and thermocouple connections at the gas valve and pull off the igniter lead at the igniter. Withdraw the burner by sliding it back to clear the injector then lift it out.
4. Remove the pilot shield. Undo the backnut retaining the electrode and remove the electrode.
5. Remove the 2 screws securing the pilot burner assembly to the pilot burner bracket. Undo the thermocouple and pilot gas pipe connections at the pilot burner assembly and CAREFULLY remove the pilot burner.
6. To replace the centre burner; refit the pilot burner, pilot draught shield, pilot pipe, thermocouple and electrode in reverse order, taking care not to damage the electrode.

   **Note.** *Ensure that the pilot burner is correctly fitted, i.e. the thermocouple is toward the front, and that the pilot injector has not been omitted.*
7. Refit the burner to the appliance. Reconnect the pilot gas pipe igniter lead and thermocouple to the gas valve, ensuring that the overheat thermostat connections are in place before tightening the thermocouple connection. DO NOT OVERTIGHTEN.

**IMPORTANT.** Care must be taken to prevent damage to the combustion chamber insulation when replacing burners.

## 36 BURNER AND CONTROLS ASSEMBLY - Exploded View CX 40 - 60

**LEGEND**

1. Overheat thermostat
2. Piezo spark generator
3. Gas inlet union
4. Main gas inlet cock
5. Gas control valve
6. Main (end) burner, 2 off
7. Main (centre) burner, 1 off
8. Main injector, 3 off
9. Gas inlet manifold
10. Pilot gas pipe
11. Overeat thermostat/piezo generator mounting bracket
12. 'O' ring seal
13. Thermocouple
14. Spark electrode
15. Pilot draught shield
16. Pilot burner

**PTP** pressure test point

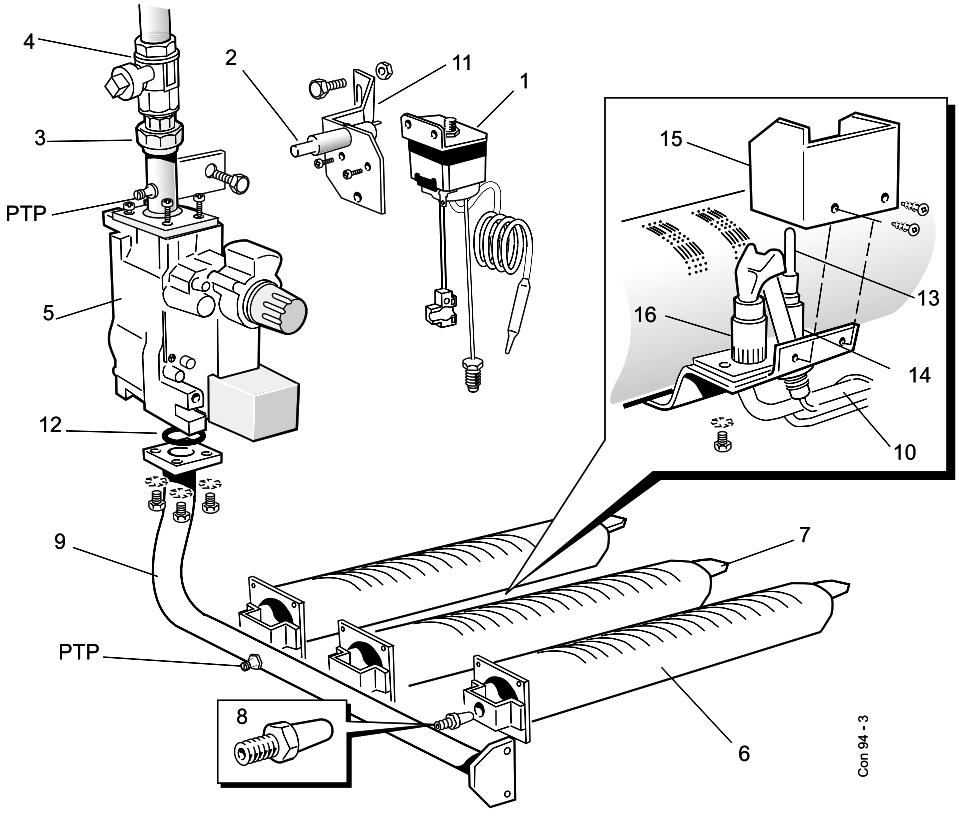

## 37 BURNER AND CONTROLS ASSEMBLY - Exploded View CX 70 - 100

**LEGEND**

1. Overheat thermostat
2. Piezo spark generator
3. Gas inlet union
4. Main gas inlet cock
5. Gas control valve
6. Main (end) burner, 2 off
7. Main (centre) burner, 1 off
8. Main injector, 3 off
9. Gas inlet manifold
10. Pilot gas pipe
11. Overheat thermostat/piezo generator mounting bracket
12. 'O' ring seal
13. Thermocouple
14. Spark electrode
15. Pilot draught shield
16. Pilot burner

**PTP** pressure test point

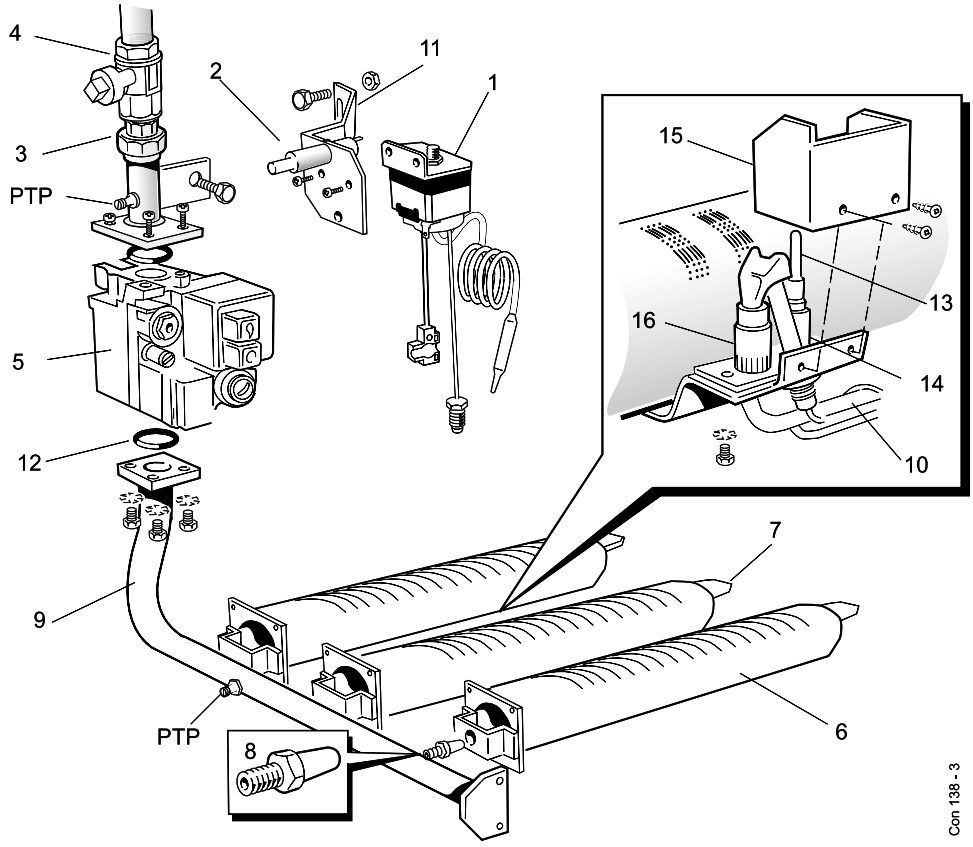


## 38 OVERHEAT THERMOSTAT

1. Undo the 2 screws retaining the thermostat/ bracket assy.
2. Trace the thermostat capillary to the thermostat pocket, remove the split pin from the thermostat pocket and lift out the overheat thermostat phial.
3. Remove the 'push-on' tags on the overheat thermostat body, noting their positions.
   If the Option Kit is fitted remove the tag from Terminal 3.

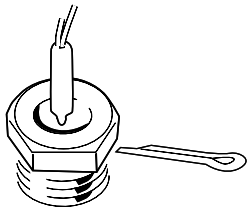


4. Fit the new overheat thermostat / bracket assembly in reverse order ; reconnect the push-on tags to Terminals 1 and 2 on the overheat thermostat body.

   If the Option Kit is fitted then refit the red wire to Terminal 3 (refer to the Option Kit instructions). Ensure that the phial is secured with the split pin in the pocket on the rear section and that the capillary is rerouted along the side casing in the clips provided.

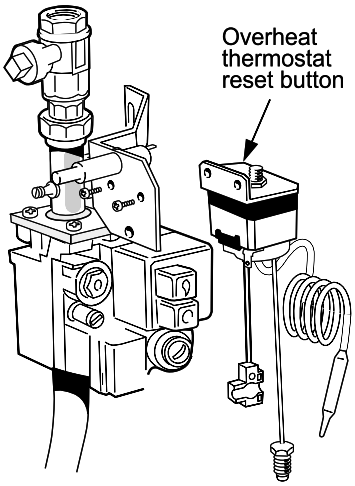


## 39 CONTROL SENSOR POTENTIOMETER

1. Undo the thermostat knob retaining screw and pull off the knob.
2. Remove the front lower panel. Refer to Frame 27.
3. Slacken the 2 screws securing the control box front panel. Refer to Frame 41.
   Carefully lift it up and swing it forward.
4. Undo the backnut and washer retaining the potentiometer and pull the plug from printed circuit board 'No. 1C'.
5. Fit the new potentiometer, ensuring that the lug on the potentiometer body locates through the hole in the controls box.

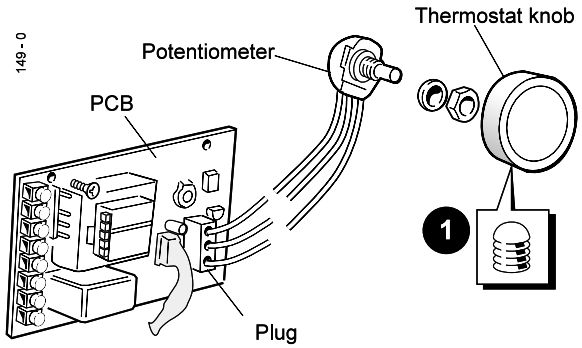

## 40 CONTROL BOX - Basic Boiler, Exploded View

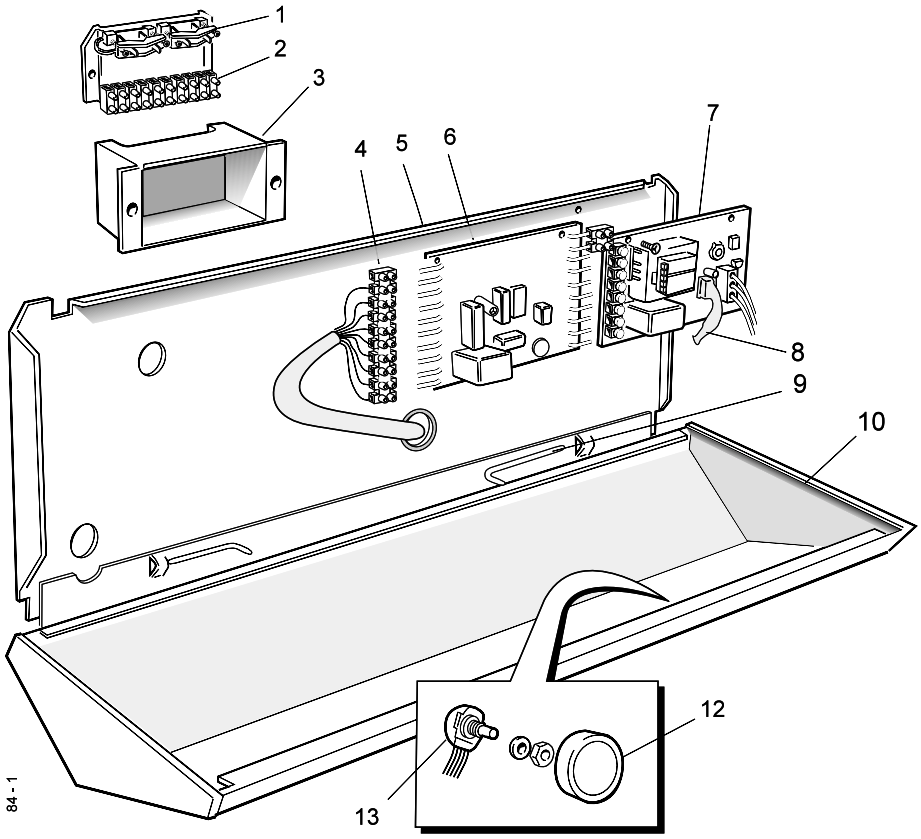


Detail of Printed Circuit Board Support

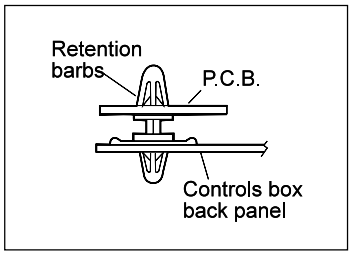


**LEGEND**

1. Wiring clamp.
2. Connection box plug.
3. Connection box.
4. Terminal strip.
5. Back panel.
6. Printed circuit board 'No. 6A'.
7. Printed circuit board 'No. 1C'.
8. Water temperature control sensor lead.
9. Hinge pin.
10. Controls box.
11. Controls box fascia (not shown).
12. Water temperature control knob.
13. Water temperature control potentiometer.

## 41 CONTROL SENSOR

1. Remove the lower front panel. Refer to Frame 27.
2. Remove the sensor from the thermostat pocket in the rear heat exchanger section by removing the Heyco bush.

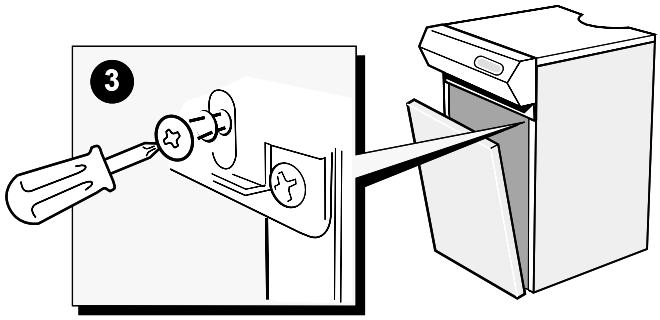


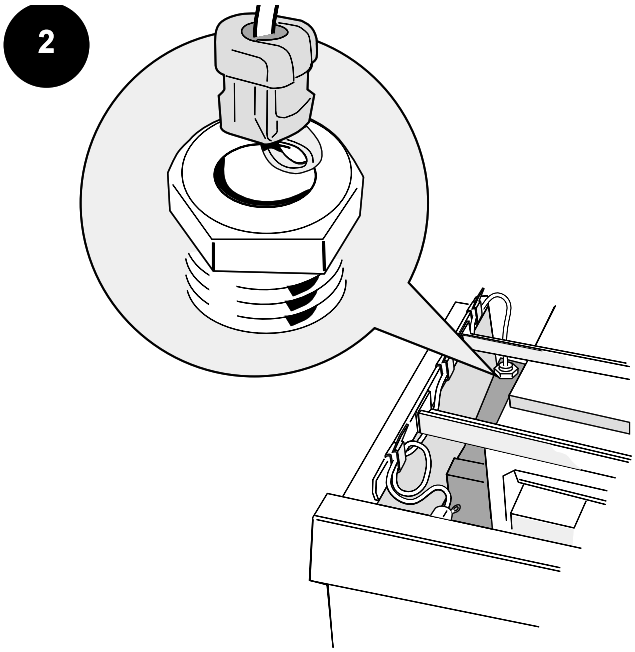


3. Slacken the 2 screws securing the control box front panel.
   Carefully lift it up and swing forward.
4. Pull out the sensor plug from printed circuit board ‘No. 1C’ and remove the strain relief bush from the back panel.
5. Pull the sensor through the hole in the back panel and the wire clips.
6. Fit the new sensor and reassemble in reverse order, ensuring that the lead is rerouted along the casing in the clips provided.

## 42 PC BOARD 'NO. 6A'

1. Remove the lower front panel.
2. Slacken the 2 screws securing the control box front panel. Carefully lift it up and swing it forward.
3. Slacken the 10 screws securing the LH side terminal strip on board 'No. 6A' (*not the screws holding the wires but the screws holding the board connections*) and the 8 screws on the LH side of board 'No. 1C'.

   Board 'No. 6A' can now be removed by squeezing in the retaining barbs.
4. Remove the 2-way terminal strip at the top RH side of board 'No. 6A' and fit it to the new board.
5. Re-assemble in reverse order, tightening all screw connections.

## 43 PC BOARD 'NO. 1C'

1. Remove the lower front panel.
2. Slacken the 2 screws securing the control box front panel.
   Carefully lift it up and swing it forward.
3. From board 'No. 1C' pull out the plug from the thermostat potentiometer and the plug from the thermostat sensor.
4. Slacken the 8 screws on the LH side of board 'No. 1C'.
5. The board can now be removed to the RH side by undoing its 2 retaining screws and by squeezing in the retaining barbs on the 2 plastic supports.
6. Fit the new board in reverse order, tightening all screws, and replug the sensor and potentiometer.

## 44 COMBUSTION CHAMBER INSULATION REPLACEMENT

The insulation boards used in the combustion chambers of these products contain man-made fibres, refractory fillers, organic and inorganic binders and as such are deemed to be harmless to humans.

**Caradon Plumbing Limited**, however, recommend that for your own comfort and to comply with good working practise the procedure described below is followed.

**IMPORTANT. Turn OFF** the gas and **DISCONNECT** the electricity supply.

To replace the insulation boards the major boiler components (including the heat exchanger and burners) have to be removed to gain access to the combustion chamber.

**Prior to removal of the boards the following protective equipment should be worn:**

- Face mask supplied with the spare part.
- Gloves supplied with the spare part.

1 Damp down the combustion chamber area containing the insulation boards.

2. Remove the insulation boards. The replacement boards are supplied in a plastic bag. This bag should be retained and the discarded boards should now be placed into it.

3. Sweep any dampened particles and place in the plastic bag.

4. Fit new insulation boards.

5. Remove the gloves and face mask and place them in the plastic bag.

6. Wash your hands and any areas of skin which may have come into contact with any of the particles from the insulation board.

7. Seal the plastic bag and dispose of it and its contents into a commercial tip.

## 45 INSTRUCTIONS FOR SITE ASSEMBLED BOILERS

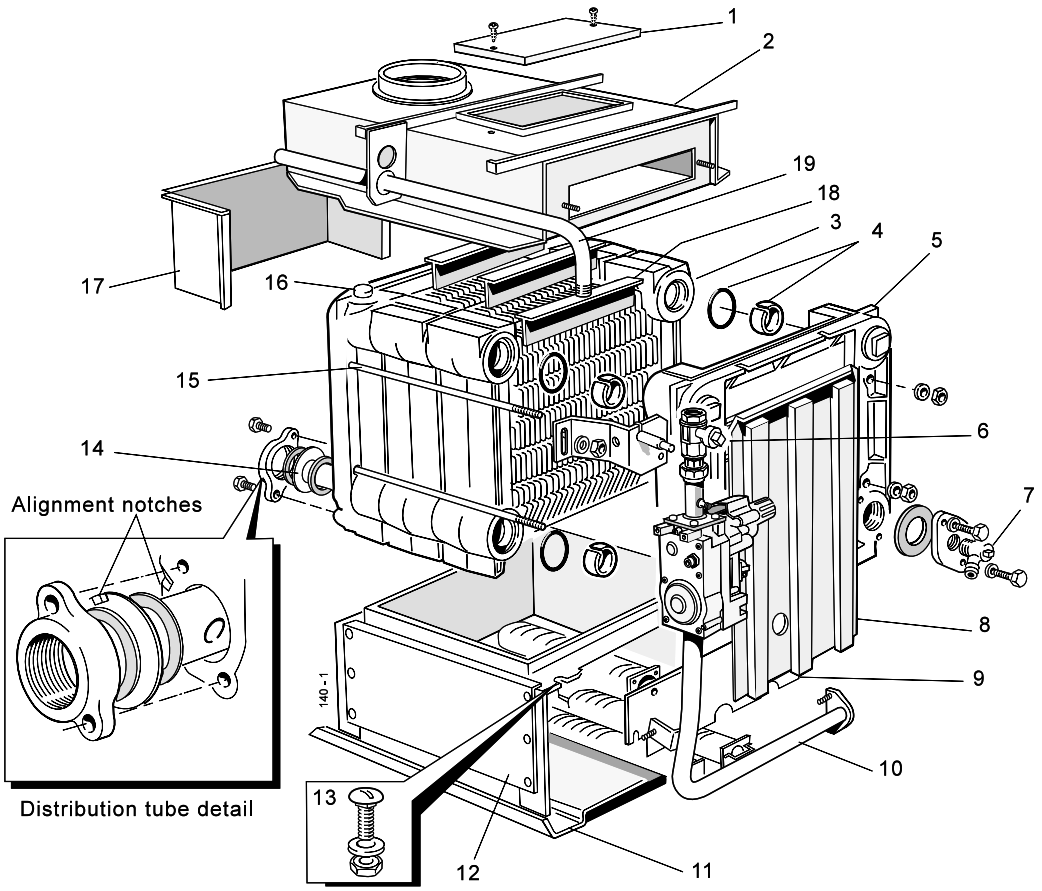


**Legend**

1. Cleanout cover.
2. Collector hood.
3. Middle section.
4. Section alignment rings & 'O' rings.
5. End section.
6. Gas cock.
7. Drain cock.
8. NOx duct.
9. Front plate.
10. Burner manifold assy.
11. Base plate.
12. Combustion chamber.
13. Section bolt.
14. Distribution tube.
15. Tie rods.
16. Thermostat pocket.
17. Spillage skirt.
18. Flueway baffles.
19. Gas pipe.

**The site assembled boiler is supplied in the following packages:**

- Combustion chamber / manifold / burner assembly.
- Platework package.
- Jacket package.
- Controls box package.
- End and centre sections.

## GENERAL

The installation of the boiler must be in accordance with the Gas Safety (Installation and Use) Regulations 1994, amendments 1996 or rules in force, building regulations, I.E.E. (BS.7671) Regulations and the bye-laws of the local water undertaking. It should also be in accordance with the relevant British Standard Codes of Practice together with any relevant requirements of the local Gas Region and local authority.

### TOOLS REQUIRED

- Spanners
- Torque wrench
- Pozi screwdriver
- Mallet

### ASSEMBLY

The combustion chamber should be positioned as near as possible to the installation site.

**IMPORTANT.** It must be remembered that the boiler distribution tube has to be fitted into the rear return tapping of the assembled boiler before siting.

Prior to assembling the sections it will be necessary to remove the burner and controls assembly from the combustion chamber.

Remove the assembly as follows:

1. Undo the 4 wing nuts securing the burner front plate. Pull the front plate forward from the top and lift it out.
2. The left and right hand burners may now be lifted out after they have been pushed back to clear the injector.
3. In order to remove the centre burner, the thermocouple and pilot gas pipe connections at the gas valve must be removed and the igniter lead pulled off at the igniter.
4. The centre burner may now be removed by pushing it back to clear the injector and lifting it out - taking care not to damage the thermocouple and pilot gas pipe while the burner is out of the appliance.
5. Undo the nut securing the manifold assembly to the combustion chamber, pull the manifold assembly to the right and lift out.

## 46 INSTRUCTIONS FOR SITE ASSEMBLED BOILERS - continued

### PREPARATION OF SECTIONS

Each section should be brushed clean on all external surfaces and any debris which may have accumulated within the section should be removed via the bottom ports.

**Section assembly - refer to exploded view, Frame 45**

**6.** Take the back section (with 1/2" BSP tappings in the top) and lift it onto the combustion chamber so that the combustion chamber back panel return is inside the section rear lip. Locate a slotted steel ring and an 'O' ring seal into each of the 4 ports. It will be necessary to squeeze the steel ring slightly to enable it to be pushed fully into the recess.

**7.** Lift a middle section onto the combustion chamber and carefully offer it up to the back section until it engages the projecting steel rings. It may be necessary to use a mallet and hardwood block to ensure that the steel rings are pushed fully into the recesses and that the sections are butted up to each other.

**Note.** *Until the final section is fitted and the tie rods fastened the sections in the assembly are not fixed together therefore CARE MUST BE TAKEN TO PREVENT the installed section coming apart.*

**8.** Repeat the above procedure for all of the remaining sections until the assembly is complete.

**9.** Fit the 4 tie rods through the holes in the sides of the end sections and fit a flat steel washer, a shakeproof washer and a nut to both ends of each tie rod. Screw up all the nuts equally, in turn, and finally tighten them to a torque of 38-41 Nm (28-30 lb. ft.).

**10.** Fit the distributor tube assembly as described in Frame 8. Fit the drain cock (refer to exploded view in Frame 45).

**11.** On open vented systems a hydraulic test should be carried out at 1 1/2 times the design pressure given in Table 2 for a period of 30 minutes.

**12.** On a pressurised system the test should be at twice the design pressure for a period of 30 minutes.

**13.** Fit the 4 coach bolts into the lugs at the bottom of the front and rear sections. Secure with the nuts and washers provided.

**14.** Fit the flue baffles which are located between the fins.

**15.** Fit the collector hood. Ensure the underside returns running across the hood sit within the front and rear section flueways. Fasten down, using the four M6 screws and nuts provided, through the front and rear fixing points.

**16.** Locate the fibreglass rope in the rear section grooves to form a seal with the spillage skirts. Fit the spillage skirts onto the collector hood using the self tapping screws provided.

**17.** Refit the manifold assembly. Position the boiler insulation over the gas line tie bracket. Fasten the bolt securing the bracket to the front section before wrapping and securing insulation around the boiler body.

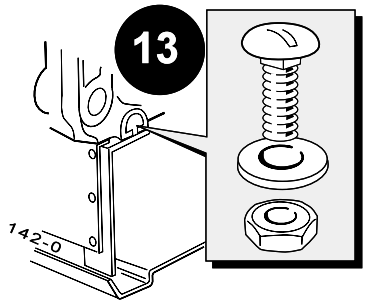


**18.** Insert the burner rear supports into the slots at the back of the combustion chamber. Lift the front of the burners over the injectors and pull forward to engage.

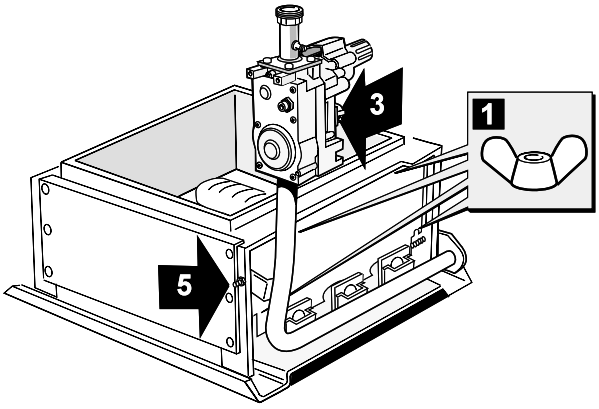


**19.** Fit the support angles (contained in the platework package) to the collector hood. The angle with the hole for the earth screw fits to the front.

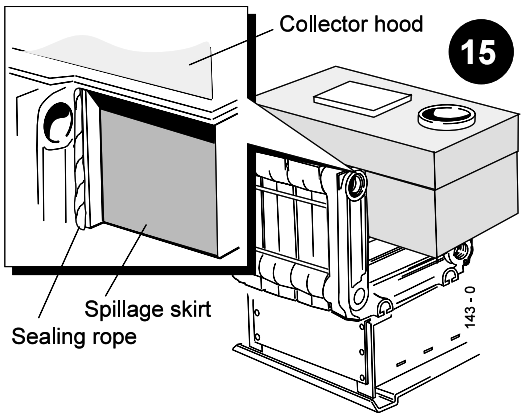


**20.** Fit the gas inlet pipe bracket to the rear support angle, on the LH side using the self tapping screws.

**21.** Fit the gas inlet pipe and make good the union between the gas cock and the valve inlet pipe.

**22.** Fit the Nox duct, using the reverse procedure to that shown in Frame 36, and secure with the extended nuts.

**23.** The boiler is now ready for installation. Go to Frame 8 in this publication and continue the installation from there.

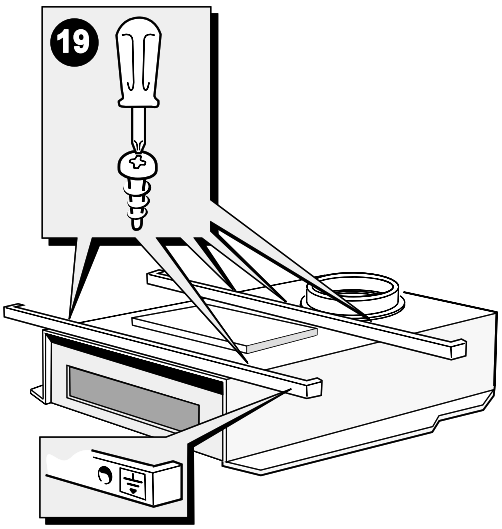

Before attempting any electrical fault finding ALWAYS carry out the preliminary electrical system checks as detailed in the Instructions for the British Gas Multimeter or other similar commercially available meter.

The preliminary electrical system checks are the FIRST electrical checks to be carried out during a fault finding procedure.

On completion of any service/fault finding task which has required the breaking and remaking of electrical connections the following checks MUST be repeated:

**a** Earth continuity

**b** Polarity

**c** Resistance to earth

Detailed instructions on the replacement of faulty components are contained in the 'Servicing' section of these Installation & Servicing Instructions.

## 47 PILOT WILL NOT LIGHT

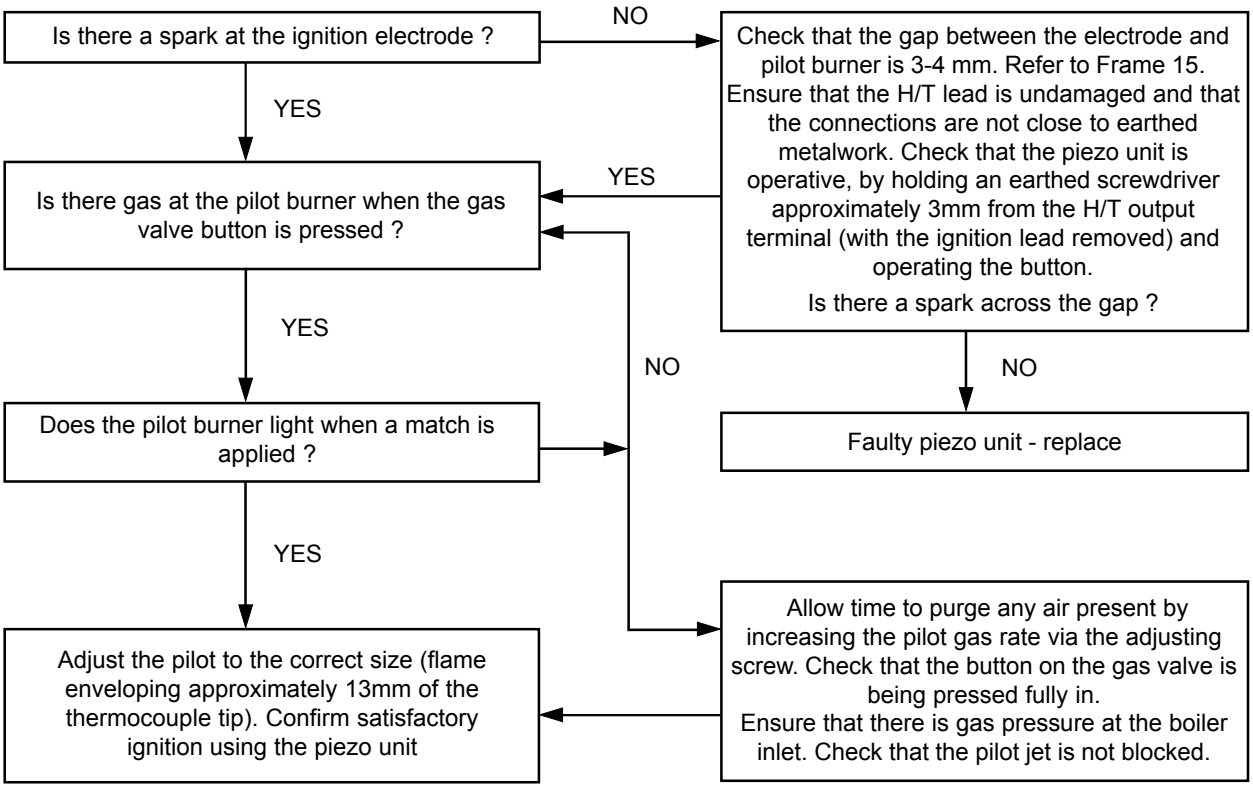


## 48 PILOT WILL NOT STAY LIT WHEN THE GAS VALVE BUTTON IS RELEASED

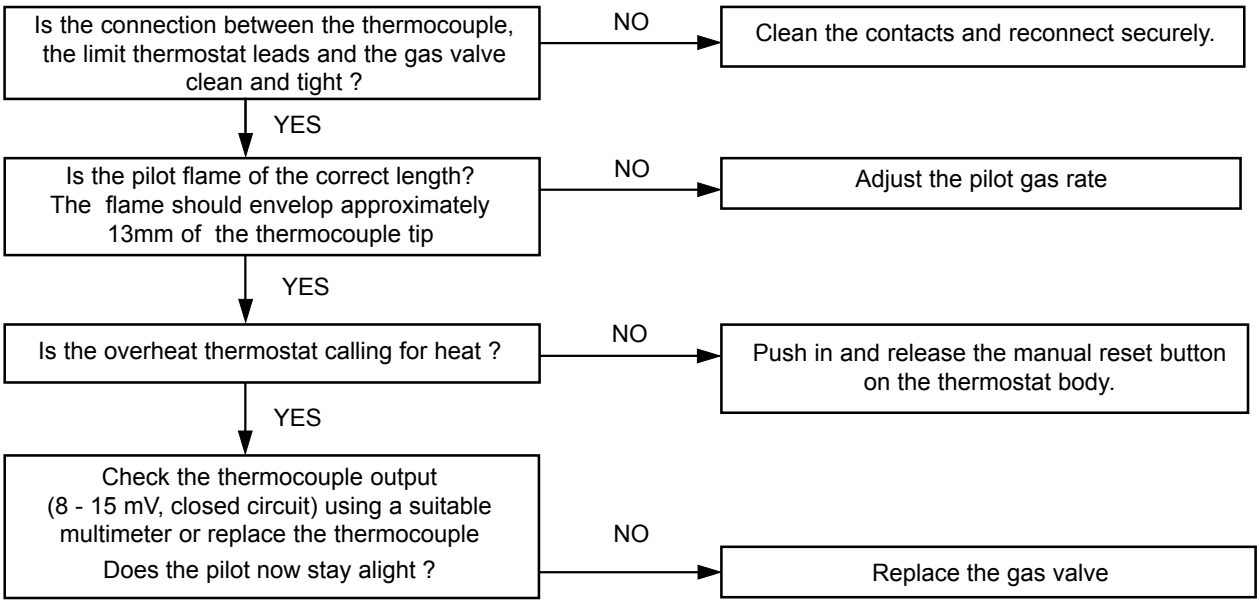

## 49 PILOT LIT BUT NO MAINS GAS

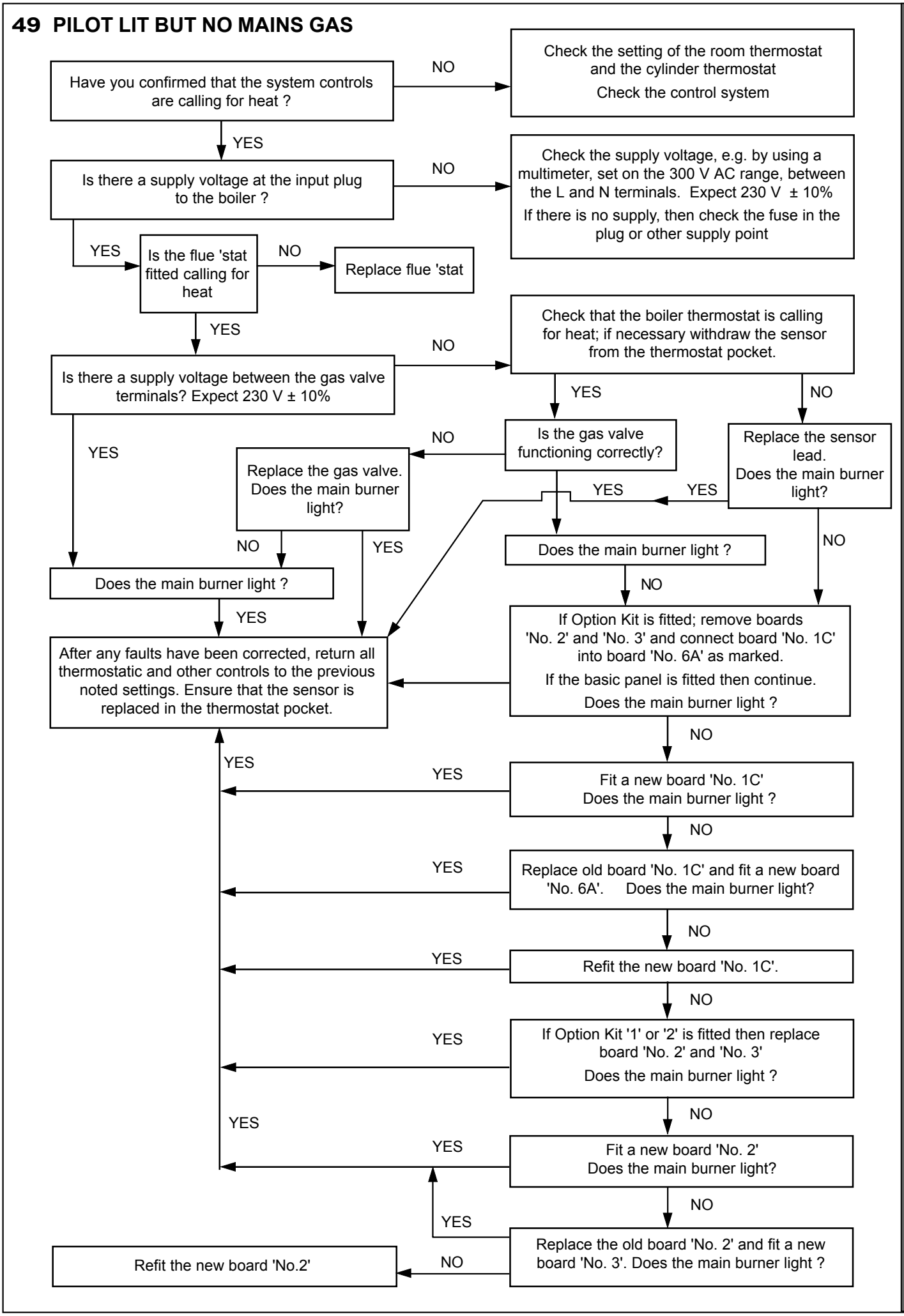

# SHORT LIST OF PARTS

The following are parts commonly required as replacements, due to damage or expendability.

Their failure or absence is likely to affect the safety and/or performance of this appliance.

When ordering spare parts please quote:

1. Boiler model
2. Boiler serial no. (refer to the data plate on the combustion chamber)
3. Boiler B.G. P.I. No. (refer to the data plate on the combustion chamber)
4. Description
5. Quantity
6. Product no.

| Key No. | Description | Qty. | Product No. |
|---|---|---|---|
| 12D | Boiler body insulation ..... CX 40 | 1 | 150 093 |
| | ..... CX50/60 | 1 | 150 094 |
| | ..... CX70/80 | 1 | 150 095 |
| | ..... CX90/100 | 1 | 150 096 |
| 23 | Centre main burner ..... Worgas 0.087.751 CX 40 | 1 | 150 153 |
| | ..... Worgas 0.087.753 CX 50 / 60 | 1 | 150 154 |
| | ..... Worgas 0.087.755 CX 70 / 80 | 1 | 150 155 |
| | ..... Worgas 0.087.757 CX 90 / 100 | 1 | 150 156 |
| 24 | End main burners ..... Worgas 0.087.750 CX 40 | 2 | 150 149 |
| | ..... Worgas 0.087.752 CX 50 / 60 | 2 | 150 150 |
| | ..... Worgas 0.087.754 CX 70 / 80 | 2 | 150 151 |
| | ..... Worgas 0.087.756 CX 90 / 100 | 2 | 150 152 |
| 26 | Main burner injectors ..... Size 3.4 mm; CX 40 | 3 | 111 323 |
| | ..... Size 3.82mm; CX 50 | 3 | 111 324 |
| | ..... Size 4.12mm; CX 60 | 3 | 111 325 |
| | ..... Size 4.57mm; CX 70 | 3 | 111 326 |
| | ..... Size 4.86mm; CX 80 | 3 | 013 177 |
| | ..... Size 5.2mm; CX 90 | 3 | 111 328 |
| | ..... Size 5.3mm; CX 100 | 3 | 013 179 |
| 27 | Pilot burner - HONEYWELL Q 349 A1067 complete with 56 /42A injector | 1 | 077 105 |
| 28 | Pilot burner injector - HONEYWELL 56 / 42A | 1 | 004 545 |
| 29 | Gas control valve - HONEYWELL V4600C 1391 1/2 in. CX40/60 | 1 | 111 265 |
| . | Gas control valve - HONEYWELL V4400C 1369 3/4 in. Softlite (white button) CX70/100 | 1 | 111 757 |
| 30 | Spark generator (less bracket) - VERNITRON 60080/002 | 1 | 003 939 |
| 32 | Ignition electrode and H.T. lead assembly - VERNITRON | 1 | 130 947 |
| 33 | Thermocouple- HONEYWELL Q 309 A-2762, 1200mm long | 1 | 002 937 |
| 34 | Thermocouple interrupter lead assembly (thermocouple to overheat 'stat.) | 1 | 132 009 |
| 35 | Thermocouple interrupter lead assembly (overheat 'stat. to gas valve) | 1 | 135 944 |
| 37 | Electronic thermostat sensor assembly - PACTROL, 2450 mm long | 1 | 013 459 |
| 38 | Thermostat potentiometer assembly | 1 | 111 809 |
| 39 | Thermostat knob | 1 | 013 241 |
| 40 | Overheat thermostat / bracket assembly - RAK 77.4/3836 | 1 | 170689 |
| 41 | Control box assembly, complete with the front panel and back panel assemblies plus printed circuit boards 'No.1C' and 'No.6A', fascia panel, and the control knob. | 1 | 112 092 |
| 42 | Printed circuit board 'No.1C' | 1 | 060 562 |
| 43 | Printed circuit board 'No. 6A' | 1 | 060 554 |

# SHORT LIST OF PARTS

| Key No. | Description | | Qty. | Product No. |
|---|---|---|---|---|
| 48 | Right hand jacket side panel - white stove enamel | CX 40 | 1 | 111 650 |
| | | CX 50 | 1 | 111 651 |
| | | CX 60 | 1 | 111 651 |
| | | CX 70 | 1 | 111 652 |
| | | CX 80 | 1 | 111 652 |
| | | CX 90/100 | 1 | 111 653 |
| 49 | Left hand jacket side panel - white stove enamel | CX 40 | 1 | 111 650 |
| | | CX 50 | 1 | 111 651 |
| | | CX 60 | 1 | 111 651 |
| | | CX 70 | 1 | 111 652 |
| | | CX 80 | 1 | 111 652 |
| | | CX 90/100 | 1 | 111 653 |
| 50 | Jacket top panel - white stove enamel | CX 40 | 1 | 111 293 |
| | | CX 50 | 1 | 111 294 |
| | | CX 60 | 1 | 111 295 |
| | | CX 70 | 1 | 111 296 |
| | | CX 80 | 1 | 111 297 |
| | | CX 90/100 | 1 | 111 298 |
| 51 | Jacket lower front panel - white stove enamel complete with lighting instructions. | | 1 | 079 939 |
| 52 | Jacket upper front control panel (less controls) - white stove enamel | | 1 | 079 828 |
| 53 | Jacket assembly, complete - white stove enamel | CX 40 | 1 | 111 279 |
| | | CX 50 | 1 | 111 280 |
| | | CX 60 | 1 | 111 281 |
| | | CX 70 | 1 | 111 282 |
| | | CX 80 | 1 | 111 283 |
| | | CX 90/100 | 1 | 111 284 |

Caradon Plumbing Limited, P.O. Box 103, National Ave, Kingston upon Hull, HU5 4JN. Telephone: 01482 492 251 Fax: 01482 448 858. Registration No. London 322 137. Registered Office: National Avenue, Kingston upon Hull, HU5 4JN. *A subsidiary of Caradon plc*

## *Technical Training*

The Caradon Plumbing Limited Technical Training Centre offers a series of first class training courses for domestic, commercial and industrial heating installers, engineers and system specifiers.

For details of courses please ring: ..... *01270 413 624*

CE

**Caradon Plumbing Limited** pursues a policy of continuing improvement in the design and performance of its products. The right is therefore reserved to vary specification without notice.

November 1999 111 303 A06

Ideal BOILERS

***Ideal Installer/Technical Helpline: 01482 498376***

## *Your feedback*
## *and your chance to win a free boiler*

At Ideal we've been leaders in the design and engineering of robust and reliable boilers for over 90 years. We want to continue as leaders by listening to your suggestions for how to improve our boilers and our service. We'll be giving away a free boiler for the five best ideas every year (to be selected by our Technical Director). Please complete this form, using extra sheets if required, and post it or fax it to us on 01482 498699.

### *Boiler details*

Model / Size *(e.g. Classic RS 230, Mexico CF 3/60 etc. Details on control panel door)*

Date of Installation

### *Installer details*

Name

Address

Post Code

Telephone (*Please include STD code*)

### *How I would improve this boiler:*

### *My general comments for Ideal:*

Caradon
Plumbing Solutions

***Ideal Installer/Technical Helpline: 01482 498376***

# *Further information*

If you would like information about Ideal Boilers please complete this sheet and fax it to us on 01482 498699 or post it to Caradon Plumbing Limited, PO Box 103, National Avenue, Kingston upon Hull, HU5 4JN.

Name

Address

Post Code

Telephone (*Please include STD code*)

- ☐ *Please send me details of Ideal Training Courses.*
- ☐ *Please arrange for a technical representative to contact me.*
- ☐ *Please arrange for me to join an Ideal factory tour.*

- ☐ *The Ideal Guide: a specifier's and installer's introduction to the Ideal domestic boiler range.*
- ☐ *The Ideal Householders Guide: to assist the installer when presenting to his/her customers.*

- ☐ *The Ideal C class combi boiler*
- ☐ *The Ideal Classic wall hung boiler*
- ☐ *The Ideal Classic System wall hung boiler*
- ☐ *The Ideal Classic LX Deluxe wall hung boiler*
- ☐ *The Ideal Mexico floor standing boiler*
- ☐ *The Ideal Minimiser heat-saving boiler*
- ☐ *The Ideal Response combi boiler*
- ☐ *The Ideal Response SE super efficiency combi boiler*
- ☐ *The Ideal Systemiser SE super efficiency system boiler*
- ☐ *The Ideal Concord high output boiler*
- ☐ *The Ideal Buccaneer oil fired boiler*

Caradon
Plumbing Solutions

Caradon Plumbing Ltd., PO Box 103, National Avenue, Kingston upon Hull, HU5 4JN. Telephone: 01482 492251 Fax: 01482 448858.

***Ideal Installer/Technical Helpline: 01482 498376***

U.I.N. 111 303 A0